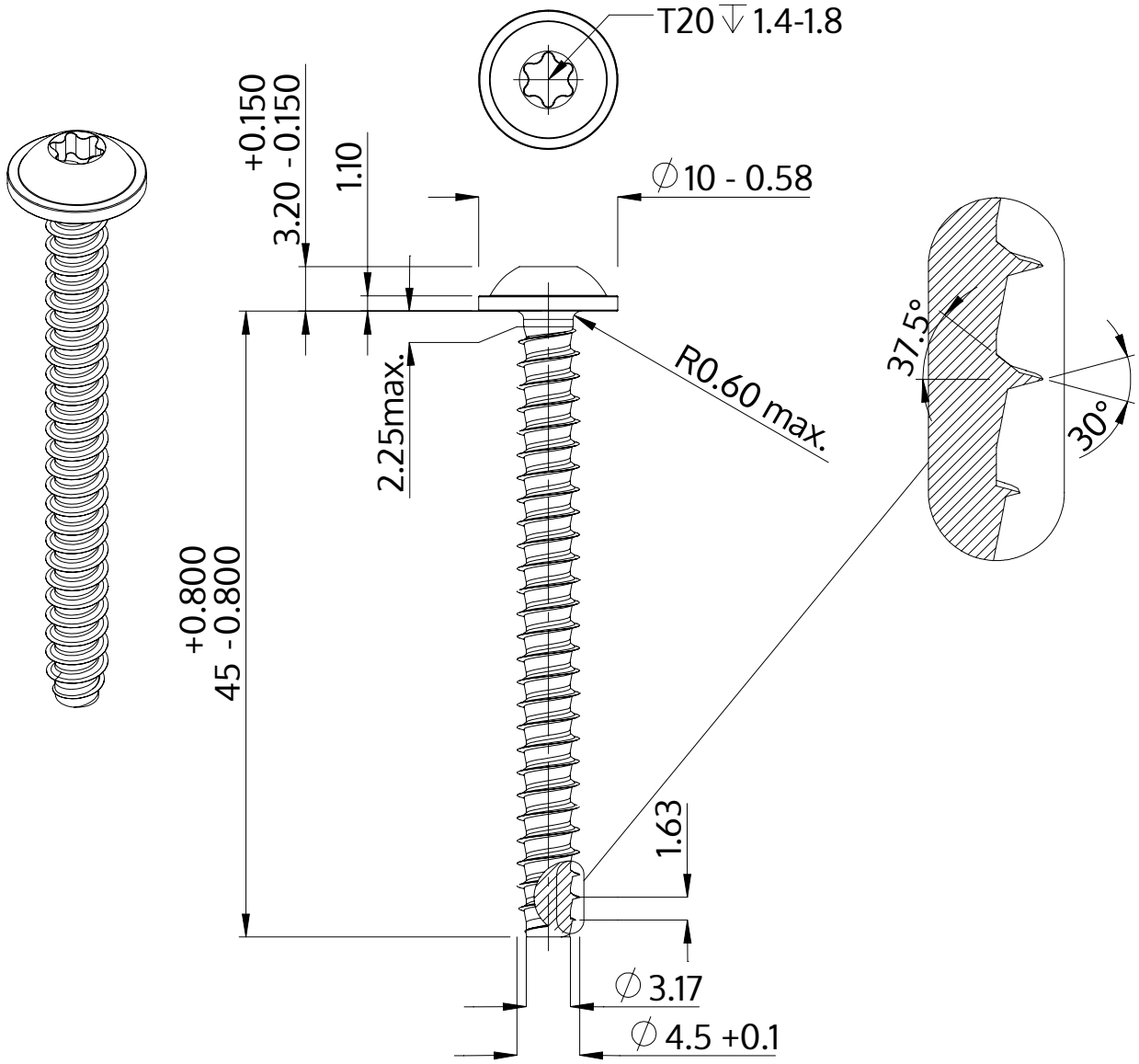

Description	STP38 4.5x45.0 - T20
Material	steel, hardened
Surface	Zinc-Nickel-plated min. 5µm, passivated black/ Cr-VI-free, baked, sealed
Weight	4.472 kg / 1000 pieces

SCREWERK	**STP380450450B**	
Metric Drawing A4	Scale 2:1	2024-10