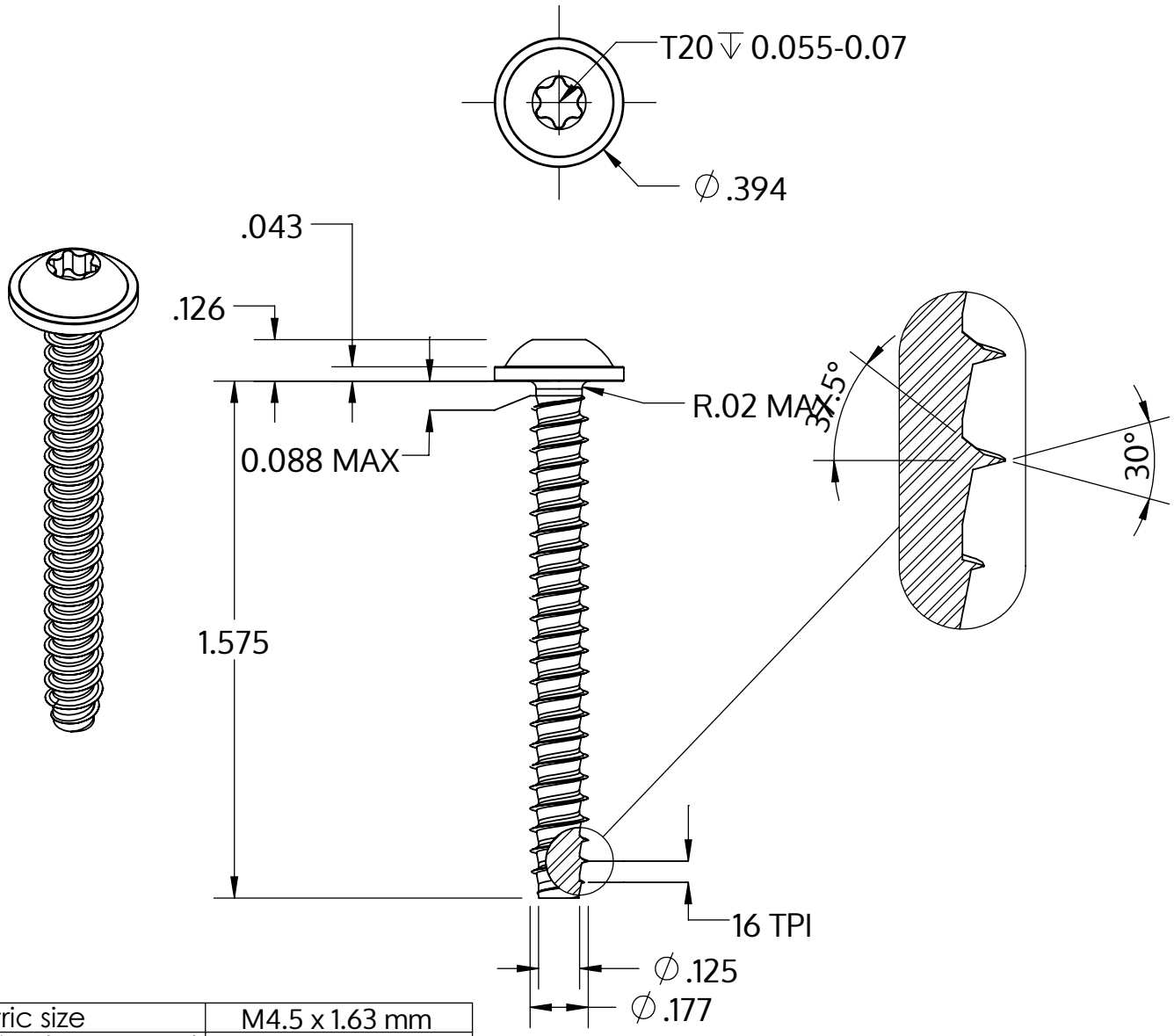


| | |
|---|---|
| Metric size | M4.5 x 1.63 mm |
| US size (converted) | #9.5-16 |
| | Tolerances [inch] |
| Length | +/- 0.031 |
| Head diameter | +0 / -0.022 |
| Head height | +/- 0.005 |
| Thread diameter | +0.003 / -0 |

| | |
|---|---|
| Popis | STP38 4.5x40.0 - T20 |
| Materiál | Nerezová ocel A2 |
| Povrch | holá, mořená a pásová ocel |
| Hmotnost | 4.088 kg / 1000 Kus |

| | | |
|---|---|---|
| SCREWERK | **STP380450400E** | |
| _Zoll Zeichnung Größe A | Měřítko 2:1 | 2024-10 |