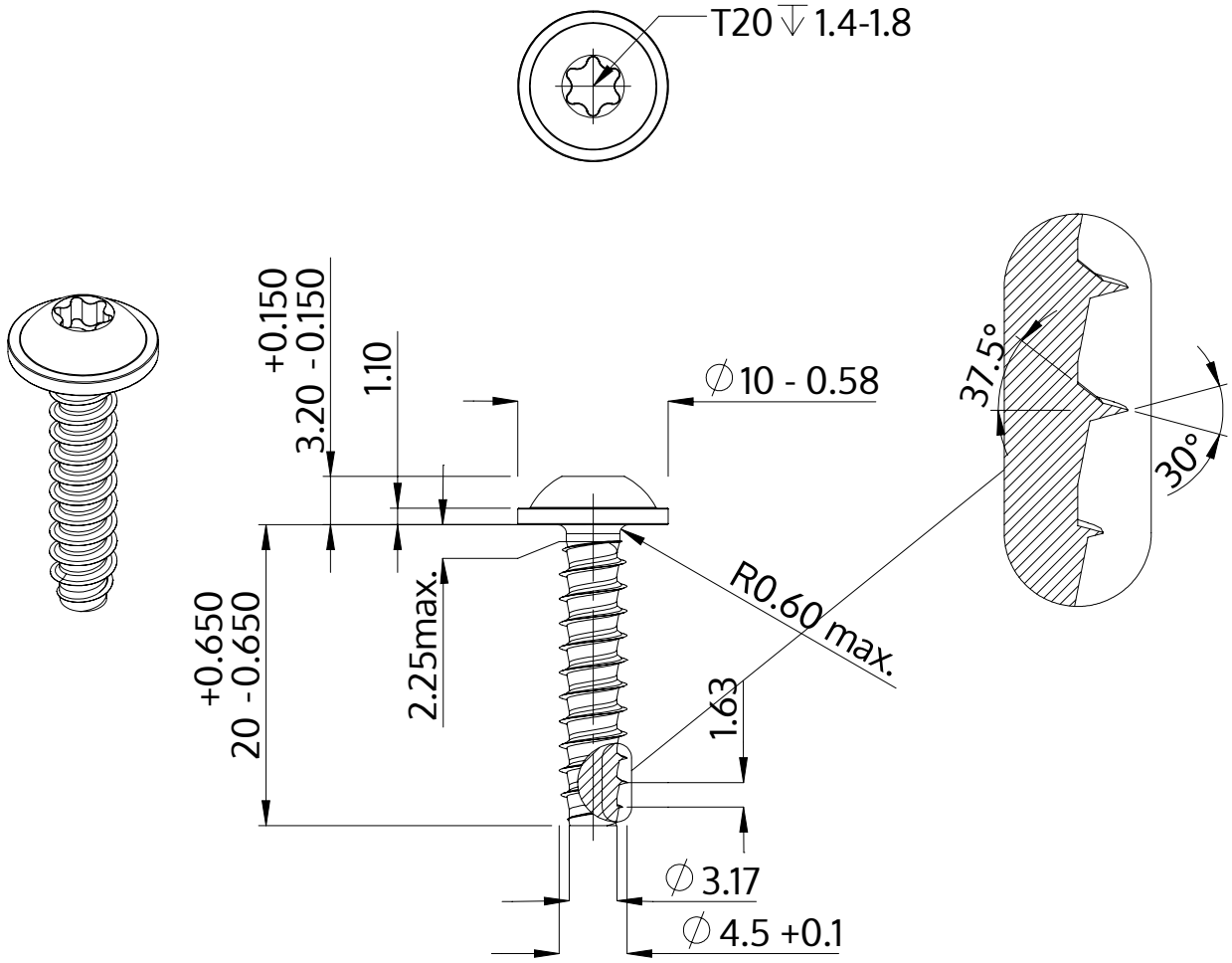

Description	STP38 4.5x20.0 - T20
Material	stainless-steel A2
Surface	bright, pickled and passivated
Weight	2.550 kg / 1000 pieces

SCREWERK	**STP380450200E**	
Metric Drawing A4	Scale 2:1	2024-10