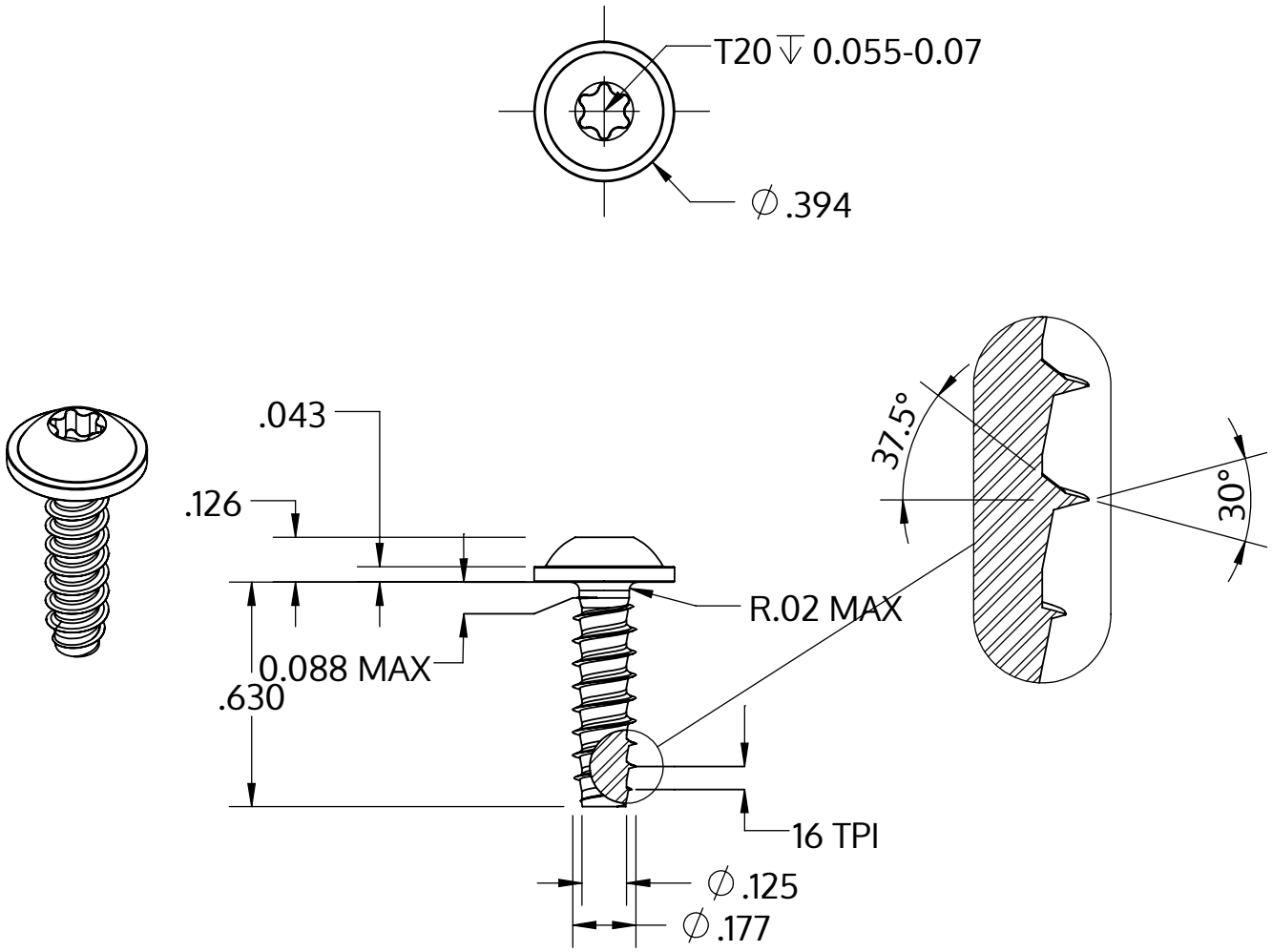


| | |
|---|---|
| Metric size | M4.5 x 1.63 mm |
| US size (converted) | #9.5-16 |
| | Tolerances [inch] |
| Length | +/- 0.021 |
| Head diameter | +0 / -0.022 |
| Head height | +/- 0.005 |
| Thread diameter | +0.003 / -0 |

| | |
|---|---|
| Beskrivning | STP38 4.5x16.0 - T20 |
| Material | rostfritt stål A2 |
| Yta | blank och passiviserad |
| Vikt | 2.243 kg / 1000 styck |

| | | |
|---|---|---|
| SCREWERK | **STP380450160E** | |
| _Zoll Zeichnung Größe A | Skala 2:1 | 2024-10 |