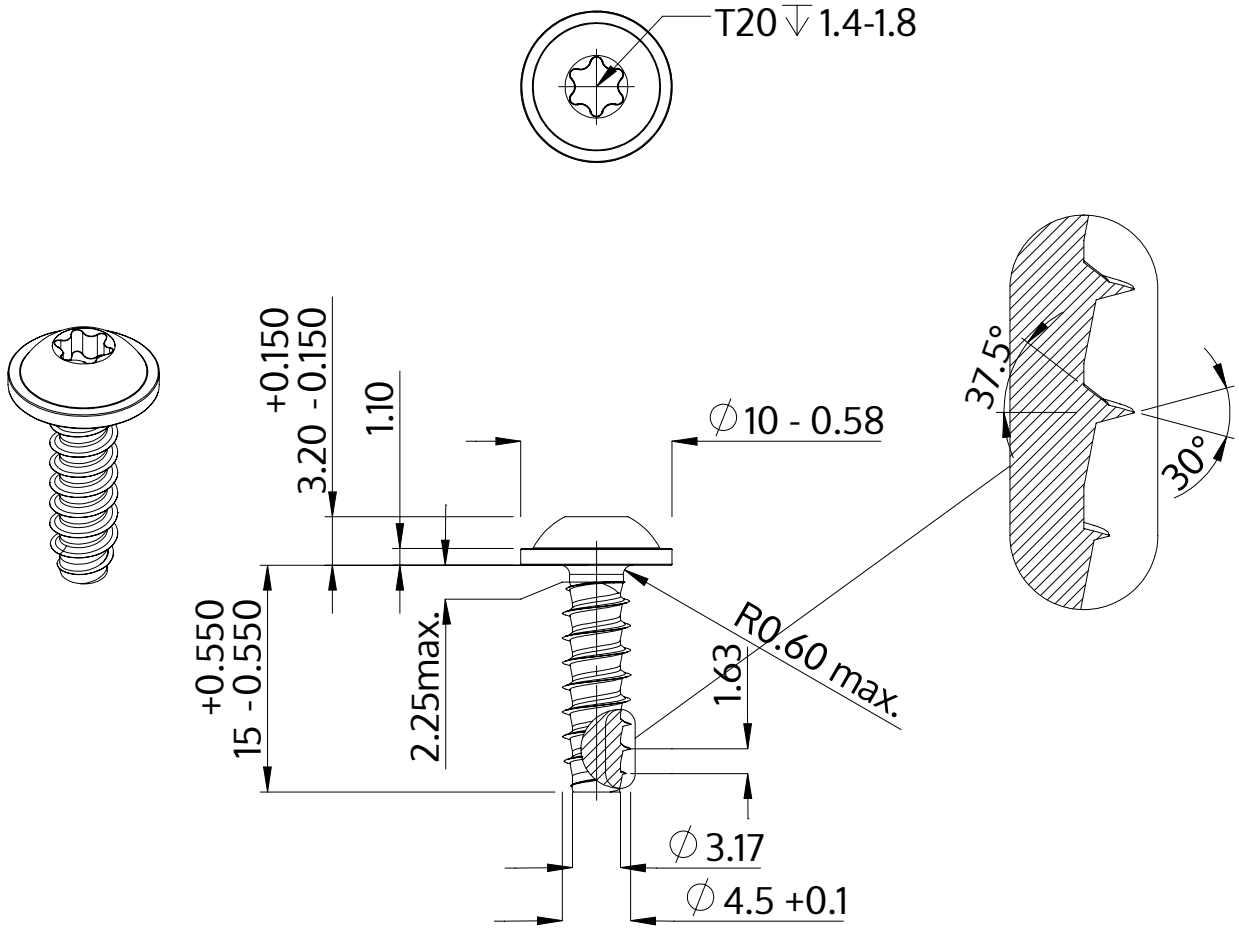

Description	STP38 4.5x15.0 - T20
Material	stainless-steel A2
Surface	bright, pickled and passivated
Weight	2.166 kg / 1000 pieces

SCREWERK	**STP380450150E**	
Metric Drawing A4	Scale 2:1	2024-10