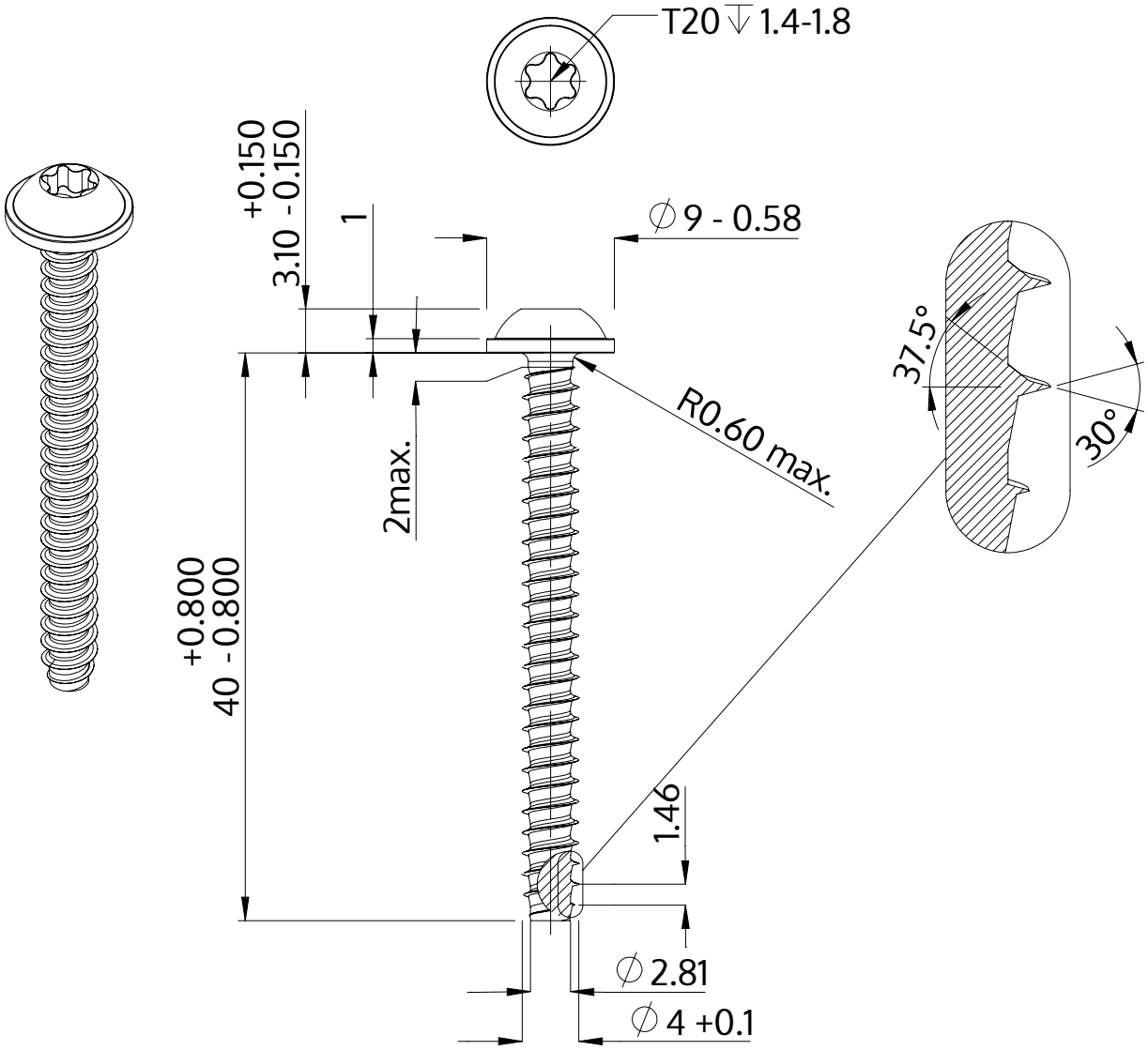

Description	STP38 4.0x40.0 - T20
Material	stainless-steel A2
Surface	bright, pickled and passivated
Weight	3.249 kg / 1000 pieces

SCREWERK	**STP380400400E**	
Metric Drawing A4	Scale 2:1	2024-10