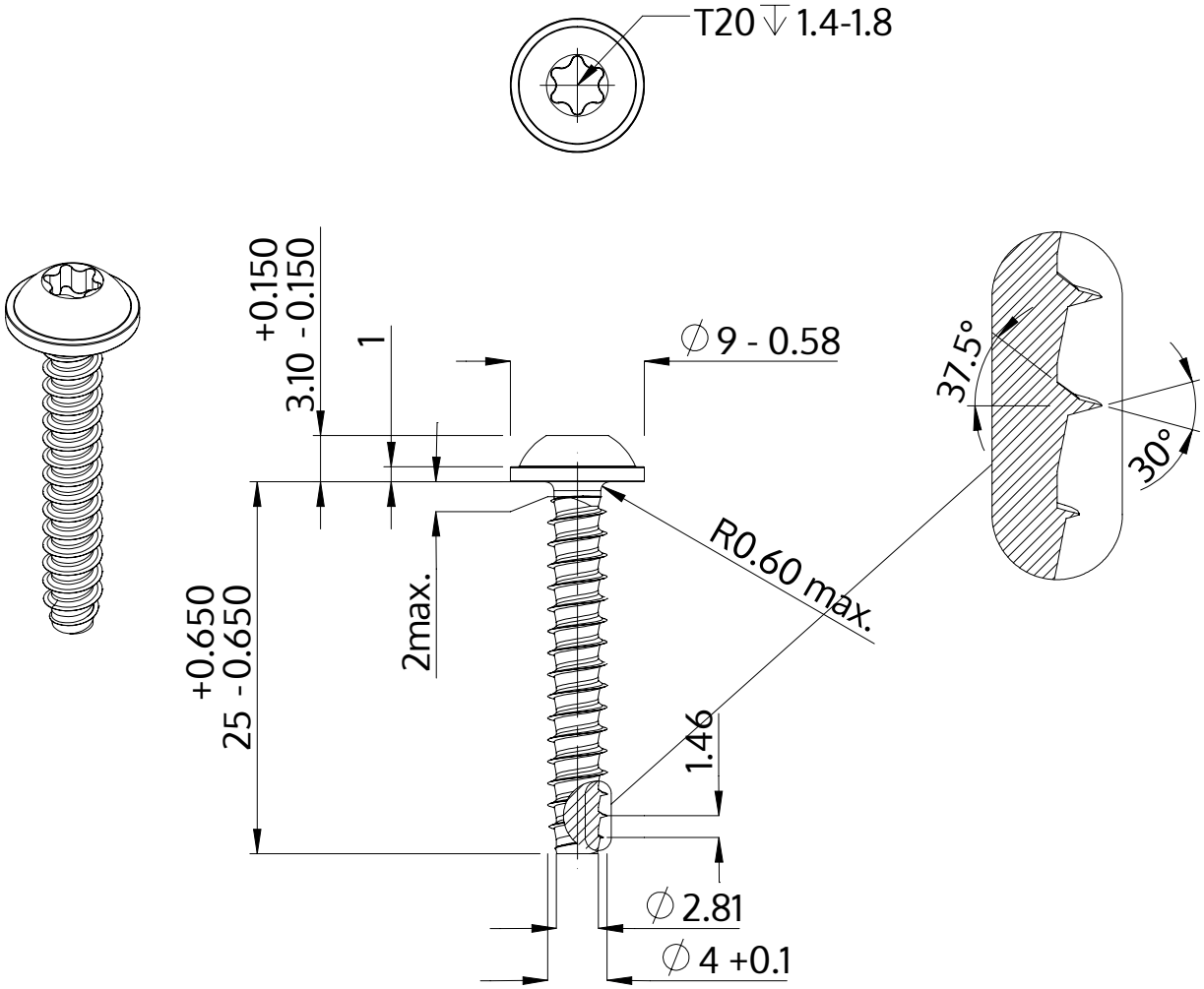

Description	STP38 4.0x25.0 - T20
Material	stainless steel A4
Surface	bright, pickled and passivated
Weight	2.339 kg / 1000 pieces

SCREWERK	**STP380400250C**	
Metric Drawing A4	Scale 2:1	2024-10