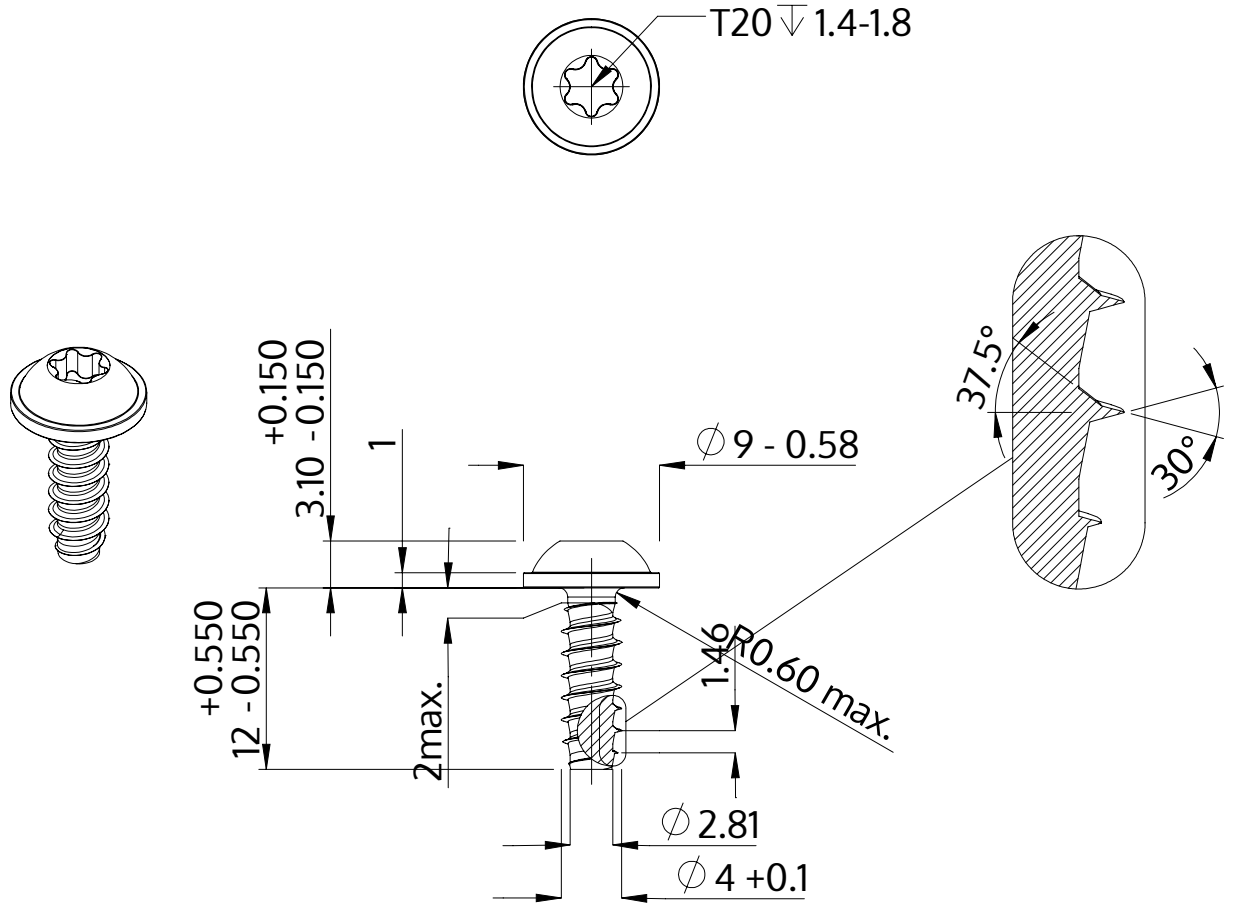

Description	STP38 4.0x12.0 - T20
Material	steel, hardened
Surface	Zinc-Nickel-plated min. 5µm, passivated black/ Cr-VI-free, baked, sealed
Weight	1.551 kg / 1000 pieces

SCREWERK	**STP380400120B**	
Metric Drawing A4	Scale 2:1	2024-10