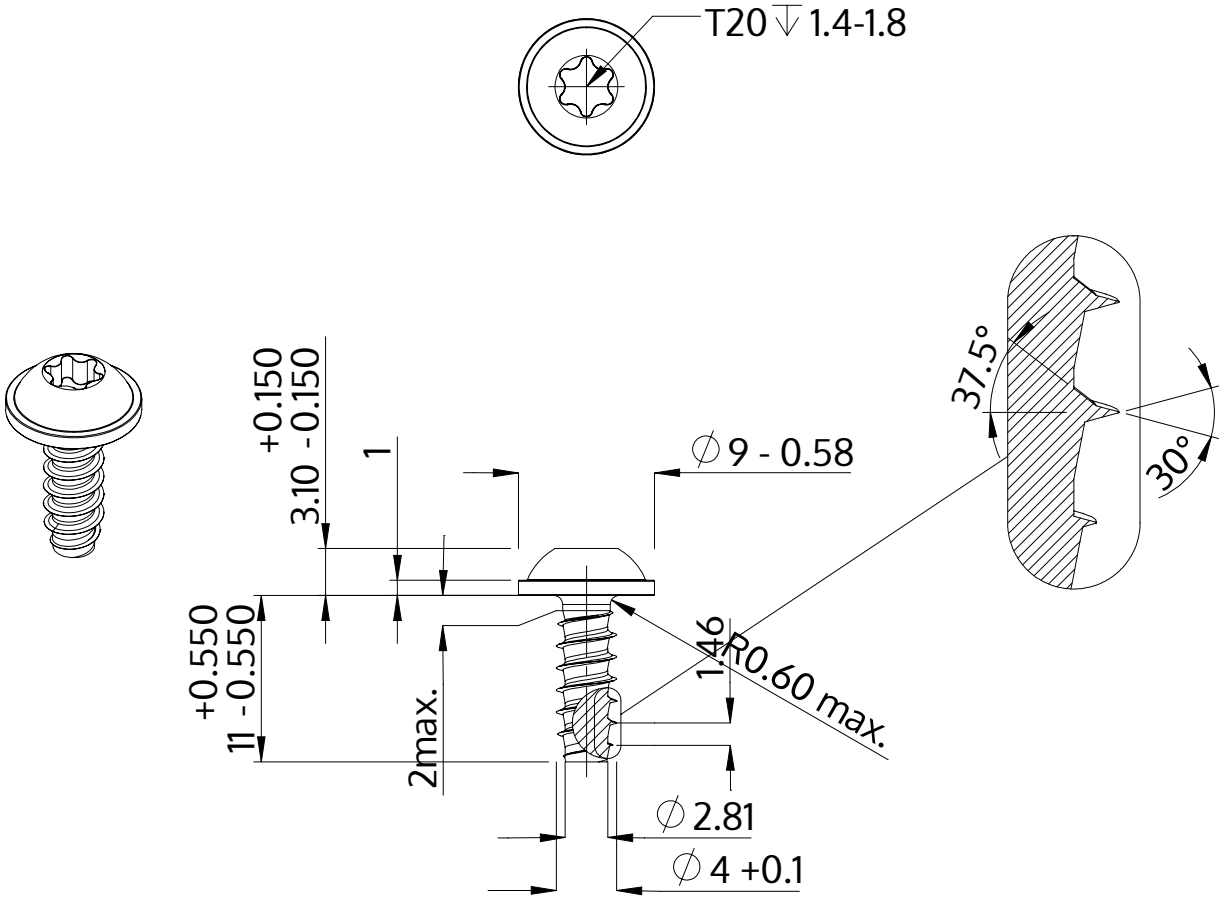

Description	STP38 4.0x11.0 - T20
Material	steel, hardened
Surface	zinc-plated 5-7 µm, baked, blue / transparent passivated
Weight	1.491 kg / 1000 pieces

SCREWERK	**STP380400110S**	
Metric Drawing A4	Scale None:1	2024-04