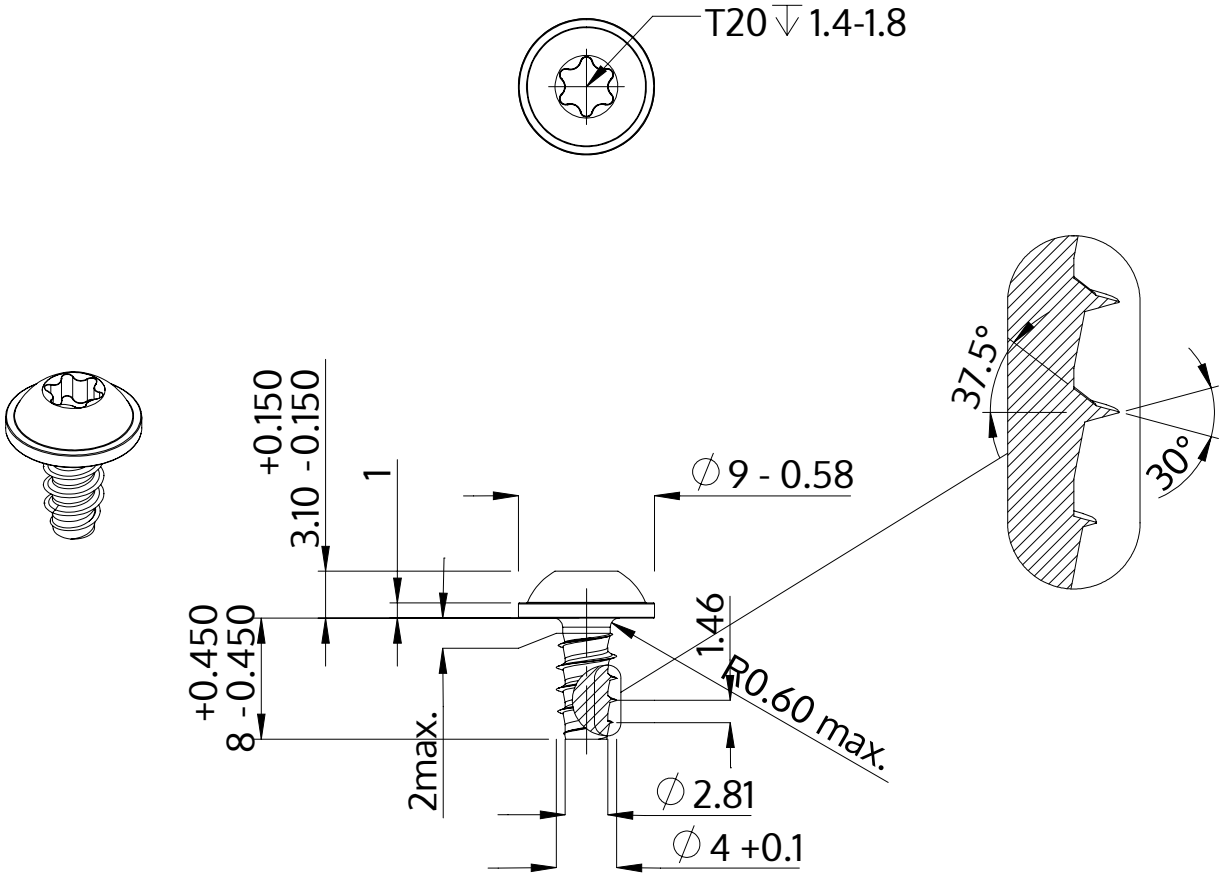

Description	STP38 4.0x8.0 - T20
Material	stainless-steel A2
Surface	black
Weight	1.309 kg / 1000 pieces

SCREWERK	**STP380400080J**	
Metric Drawing A4	Scale 2:1	2024-10