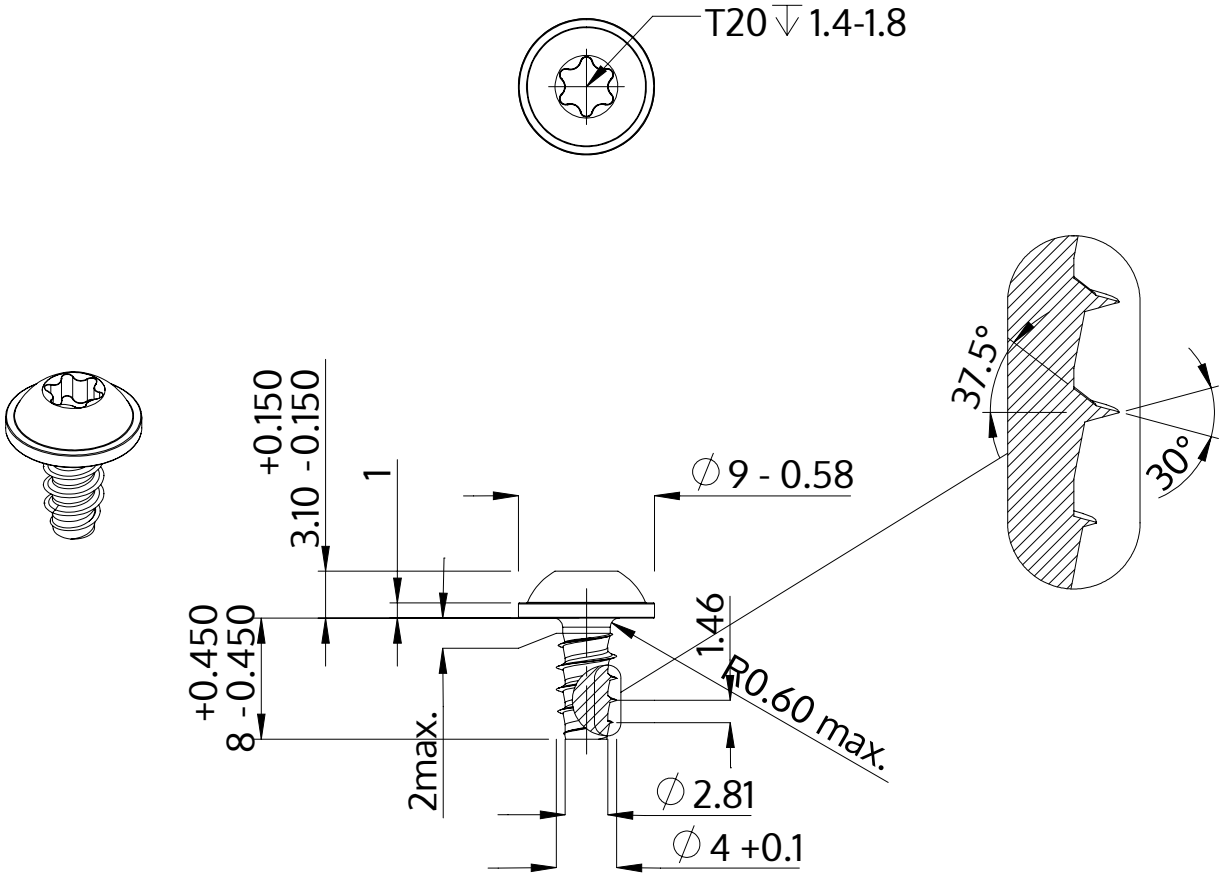

Description	STP38 4.0x8.0 - T20
Material	stainless steel A4
Surface	bright, pickled and passivated
Weight	1.309 kg / 1000 pieces

SCREWERK	**STP380400080C**	
Metric Drawing A4	Scale None:1	2024-04