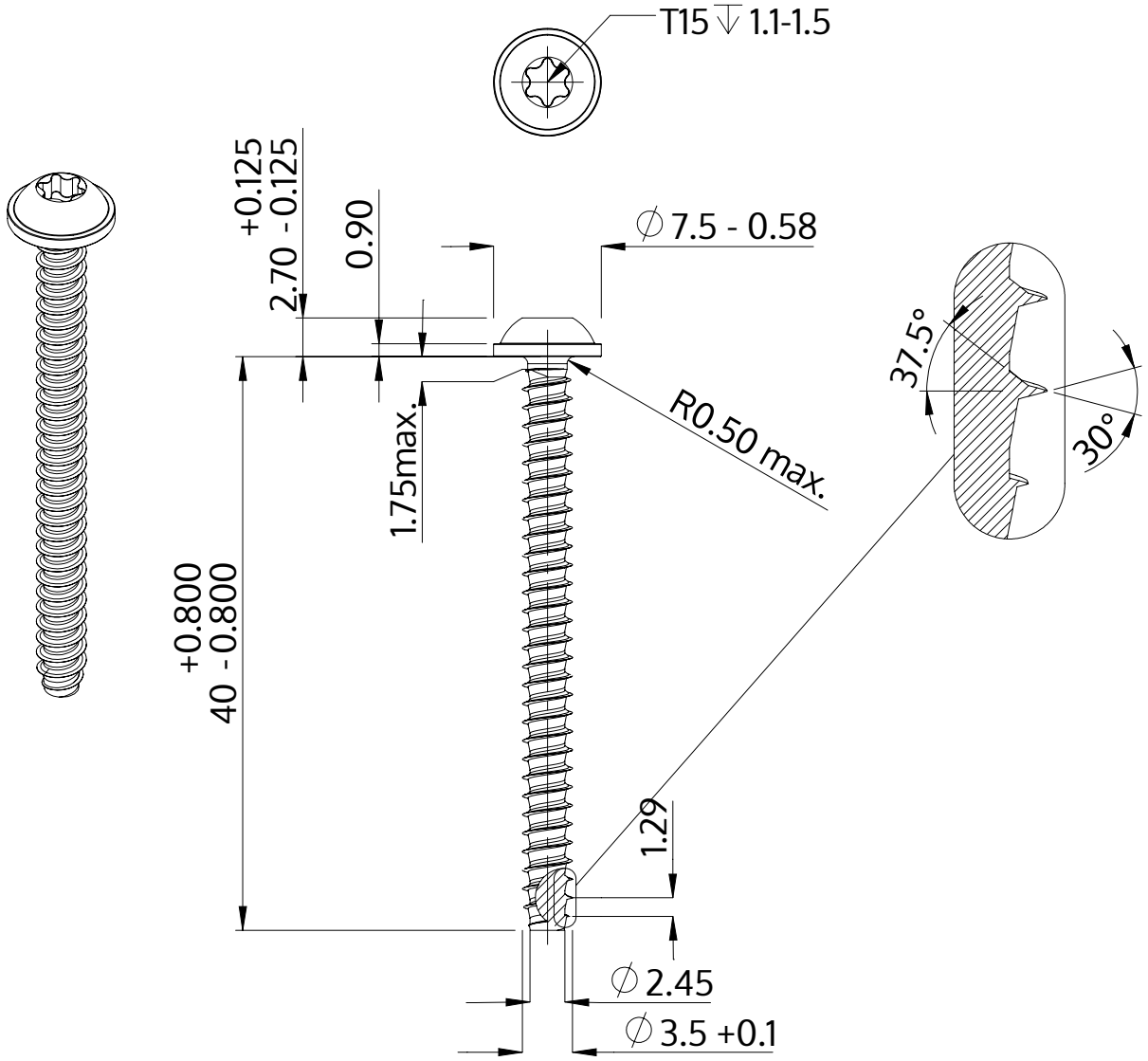

Description	STP38 3.5x40.0 - T15
Material	stainless-steel A2
Surface	bright, pickled and passivated
Weight	2.372 kg / 1000 pieces

SCREWERK	**STP380350400E**	
Metric Drawing A4	Scale 2:1	2024-10