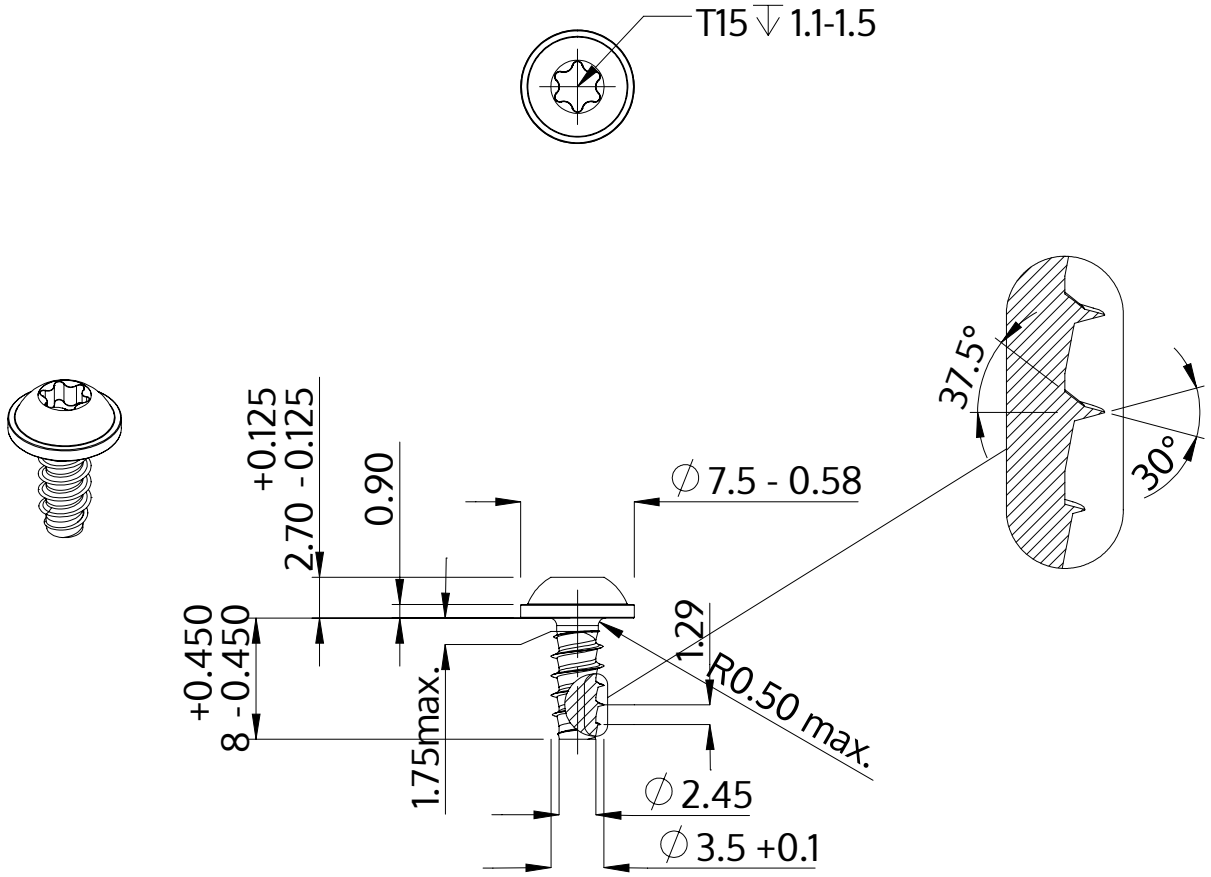

Description	STP38 3.5x8.0 - T15
Material	steel, hardened
Surface	zinc-plated 5-7 µm, baked, blue / transparent passivated
Weight	0.860 kg / 1000 pieces

SCREWERK	**STP380350080S**	
Metric Drawing A4	Scale None:1	2024-04