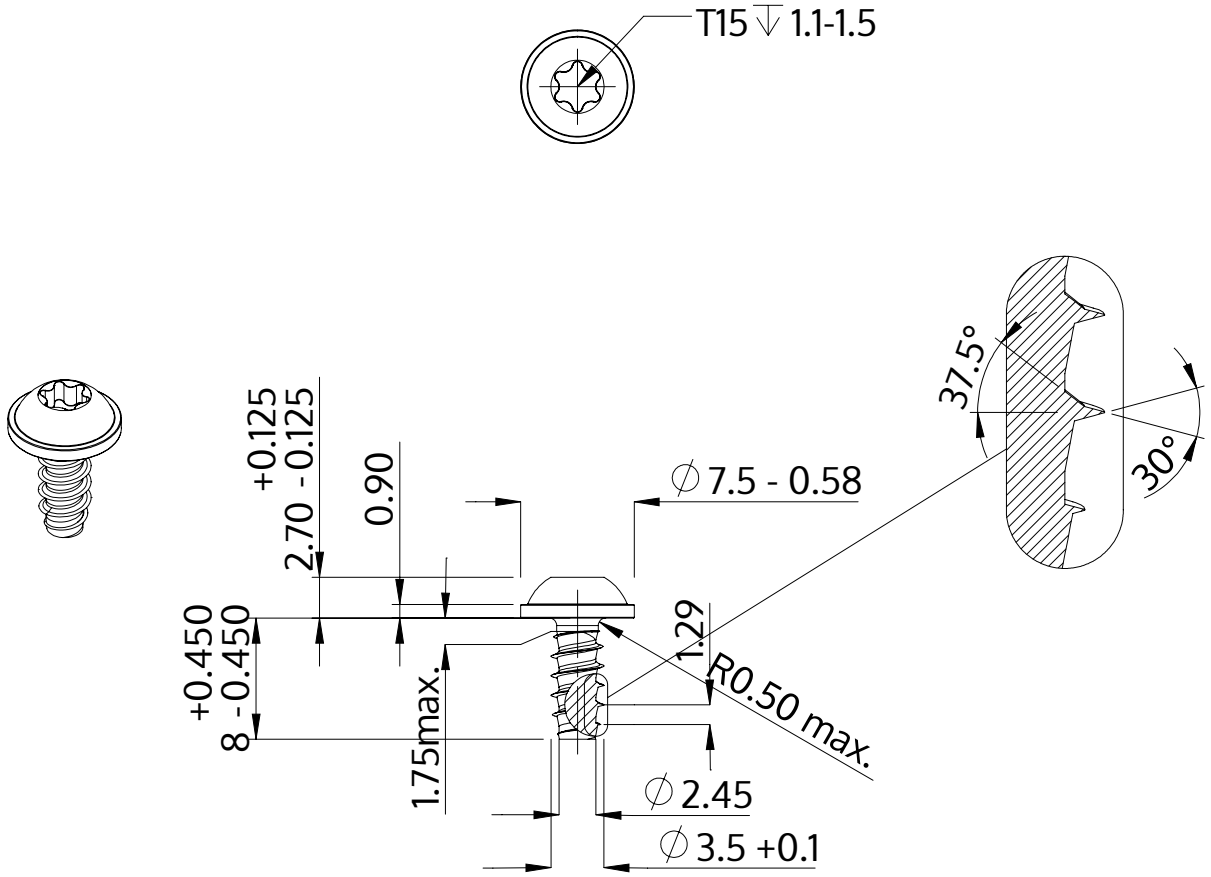

Description	STP38 3.5x8.0 - T15
Material	stainless-steel A2
Surface	bright, pickled and passivated
Weight	0.860 kg / 1000 pieces

SCREWERK	**STP380350080E**	
Metric Drawing A4	Scale None:1	2024-04