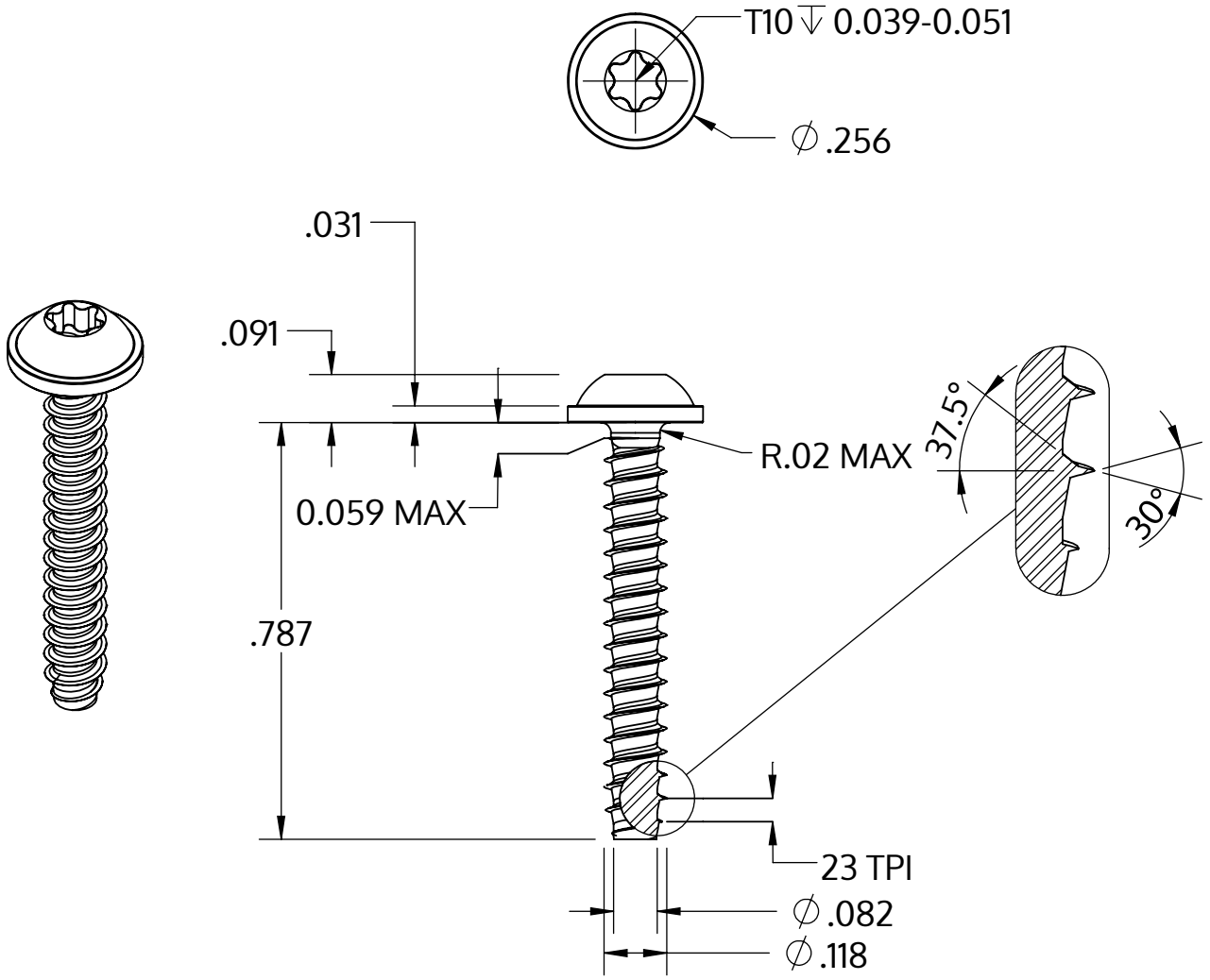


| | |
|---|---|
| Metric size | M3 x 1.12 mm |
| US size (converted) | #4-23 |
| | Tolerances [inch] |
| Length | +/- 0.025 |
| Head diameter | +0 / -0.022 |
| Head height | +/- 0.004 |
| Thread diameter | +0.003 / -0 |

| | |
|---|---|
| Descripción | STP38 3.0x20.0 - T10 |
| Material | Acero, endurecido |
| Superficie | Zinc-Niquelado, pasivado negro/ sin Cr-VI, recocido, sellado |
| Peso | 0.998 kg / 1000 Piezas |

| | | |
|---|---|---|
| SCREWERK | **STP380300200B** | |
| _Zoll Zeichnung Größe A | Escalada 3:1 | 2024-10 |