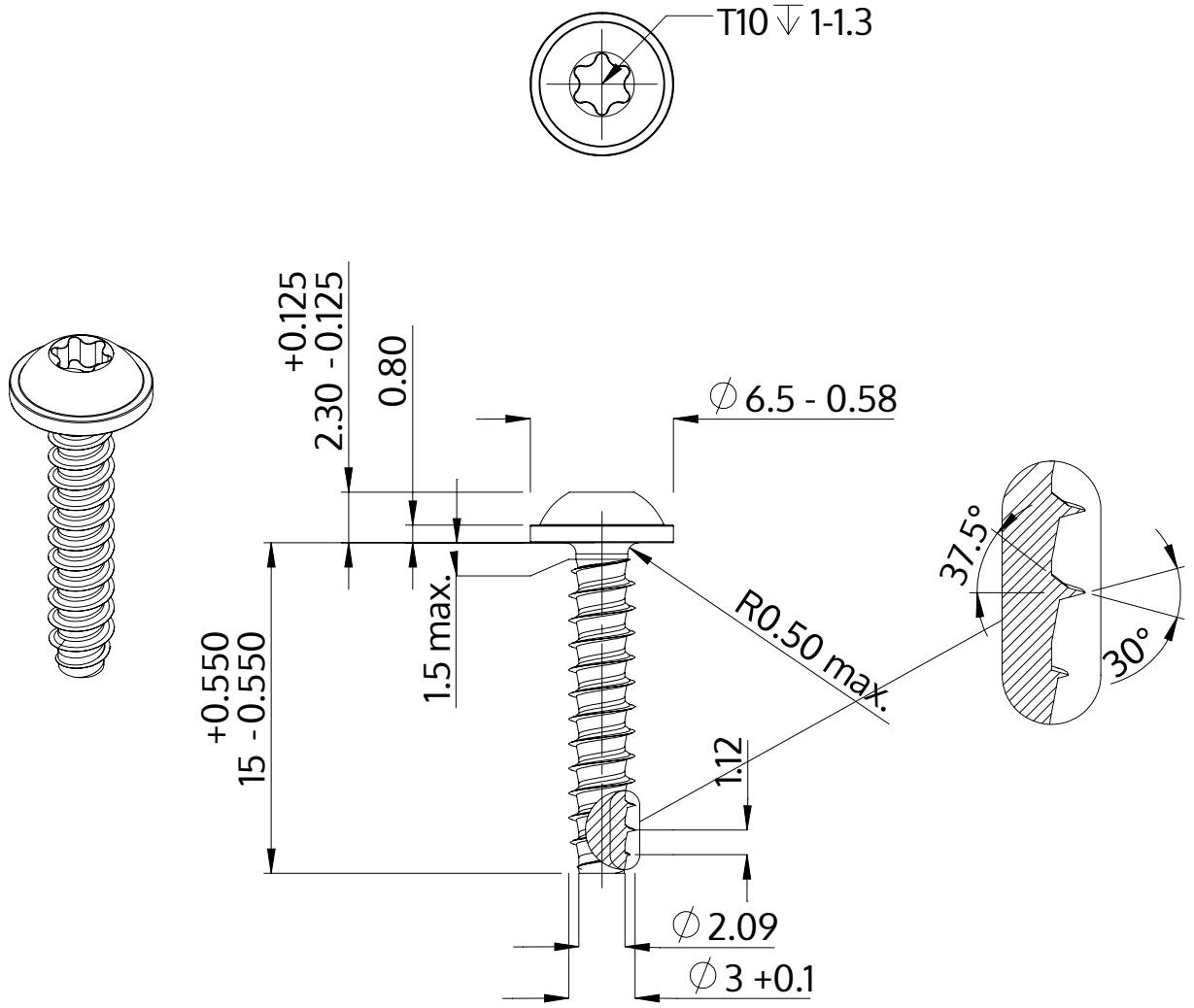

Description	STP38 3.0x15.0 - T10
Material	stainless-steel A2
Surface	bright, pickled and passivated
Weight	0.829 kg / 1000 pieces

SCREWERK	**STP380300150E**	
Metric Drawing A4	Scale 3:1	2024-10