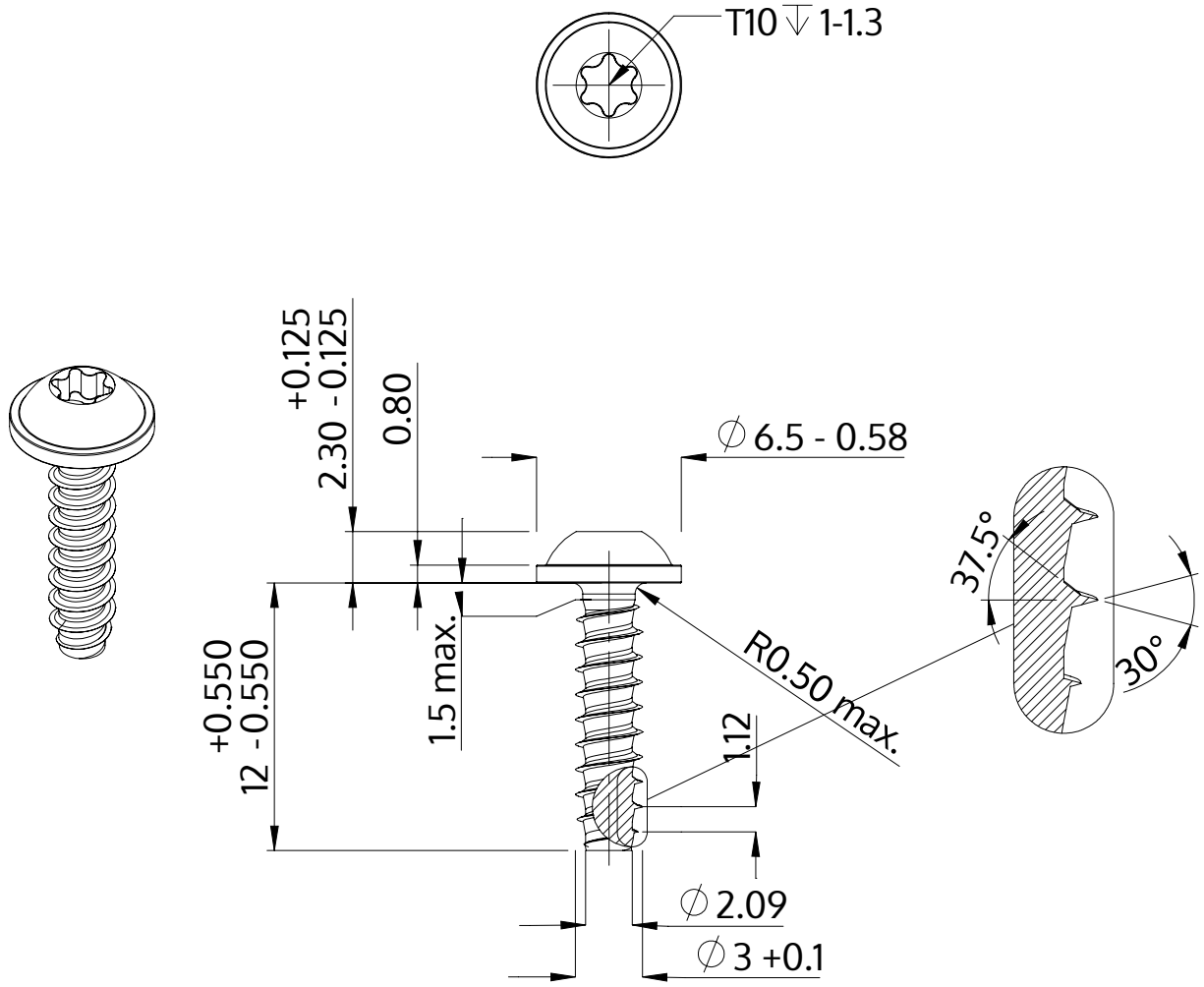

Description	STP38 3.0x12.0 - T10
Material	steel, hardened
Surface	zinc-plated 5-7 µm, baked, blue / transparent passivated
Weight	0.727 kg / 1000 pieces

SCREWERK	**STP380300120S**	
Metric Drawing A4	Scale 3:1	2024-10