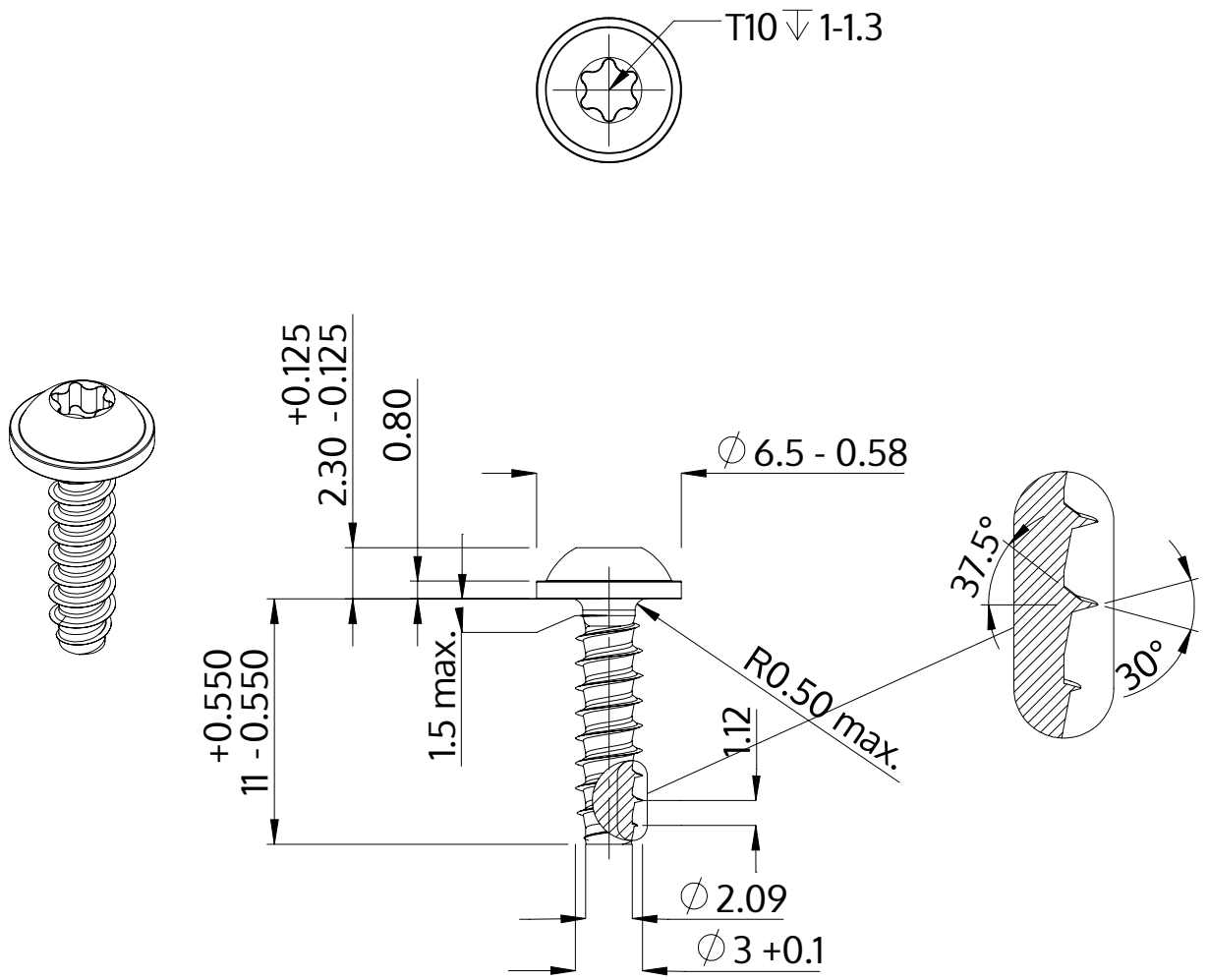

Description	STP38 3.0x11.0 - T10
Material	steel, hardened
Surface	zinc-plated 5-7 µm, baked, blue / transparent passivated
Weight	0.693 kg / 1000 pieces

SCREWERK	**STP380300110S**	
Metric Drawing A4	Scale None:1	2024-04