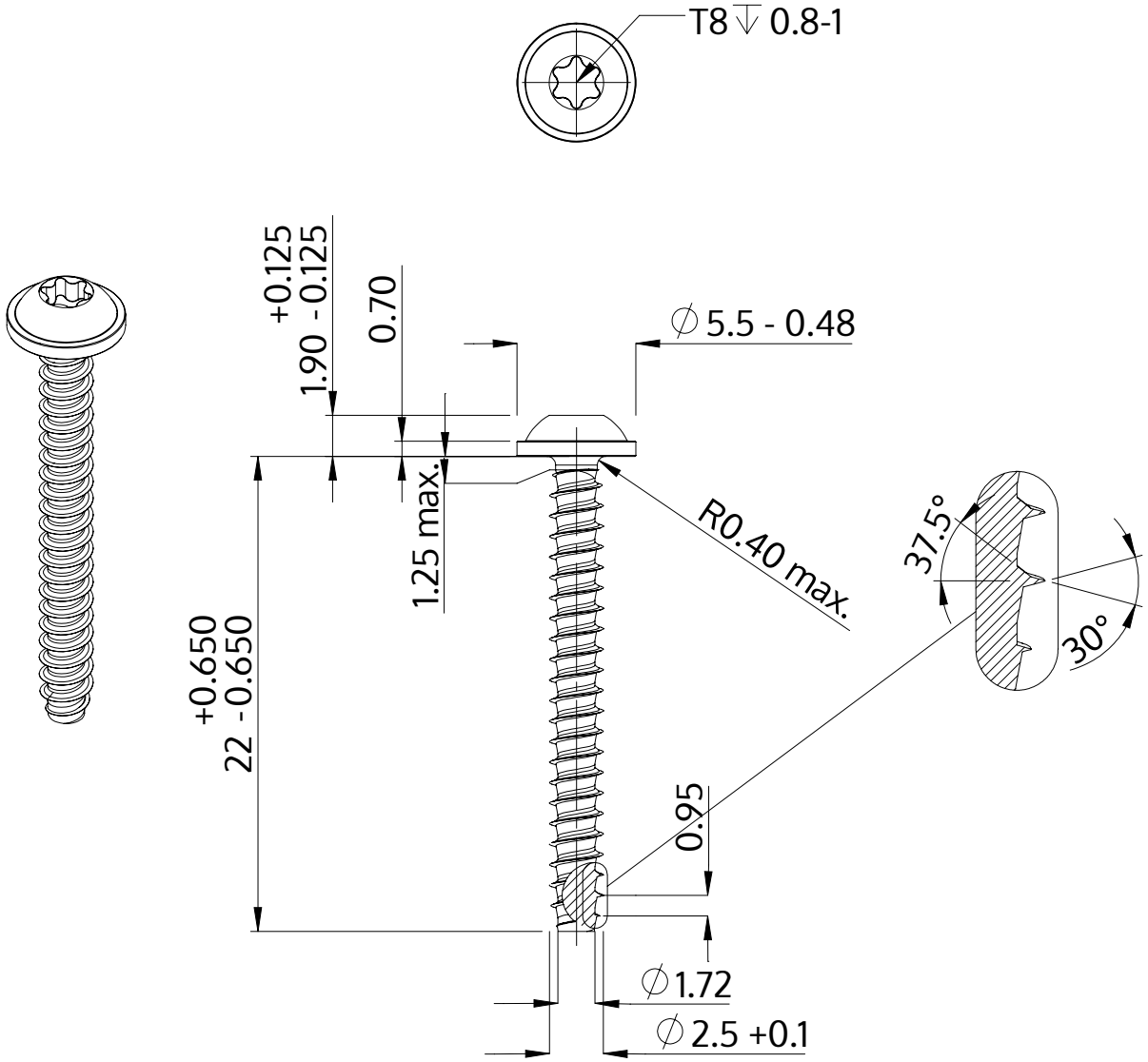

Description	STP38 2.5x22.0 - T8
Material	stainless-steel A2
Surface	bright, pickled and passivated
Weight	0.708 kg / 1000 pieces

SCREWERK	**STP380250220E**	
Metric Drawing A4	Scale 3:1	2024-05