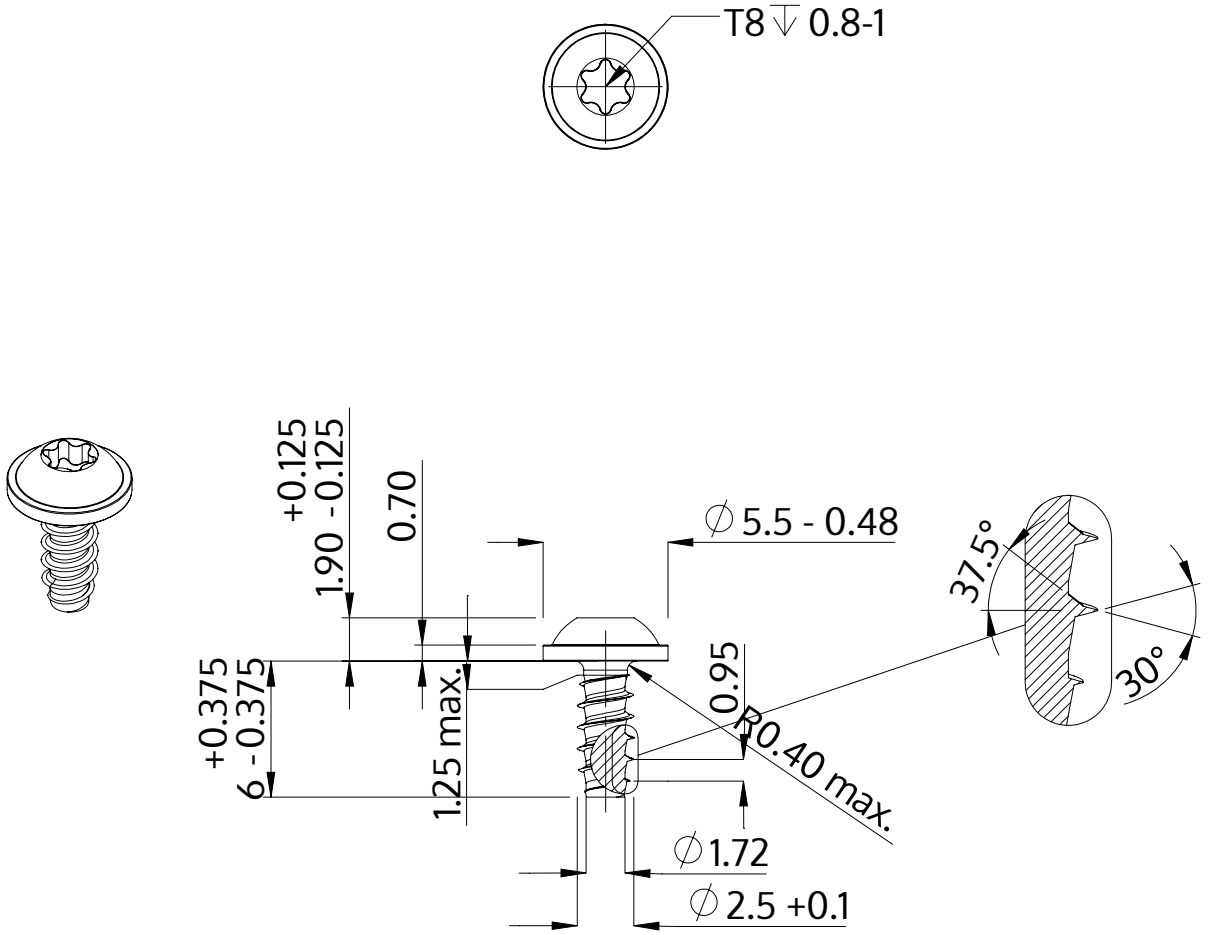

Description	STP38 2.5x6.0 - T8
Material	stainless-steel A2
Surface	bright, pickled and passivated
Weight	0.323 kg / 1000 pieces

SCREWERK	**STP380250060E**	
Metric Drawing A4	Scale None:1	2024-04