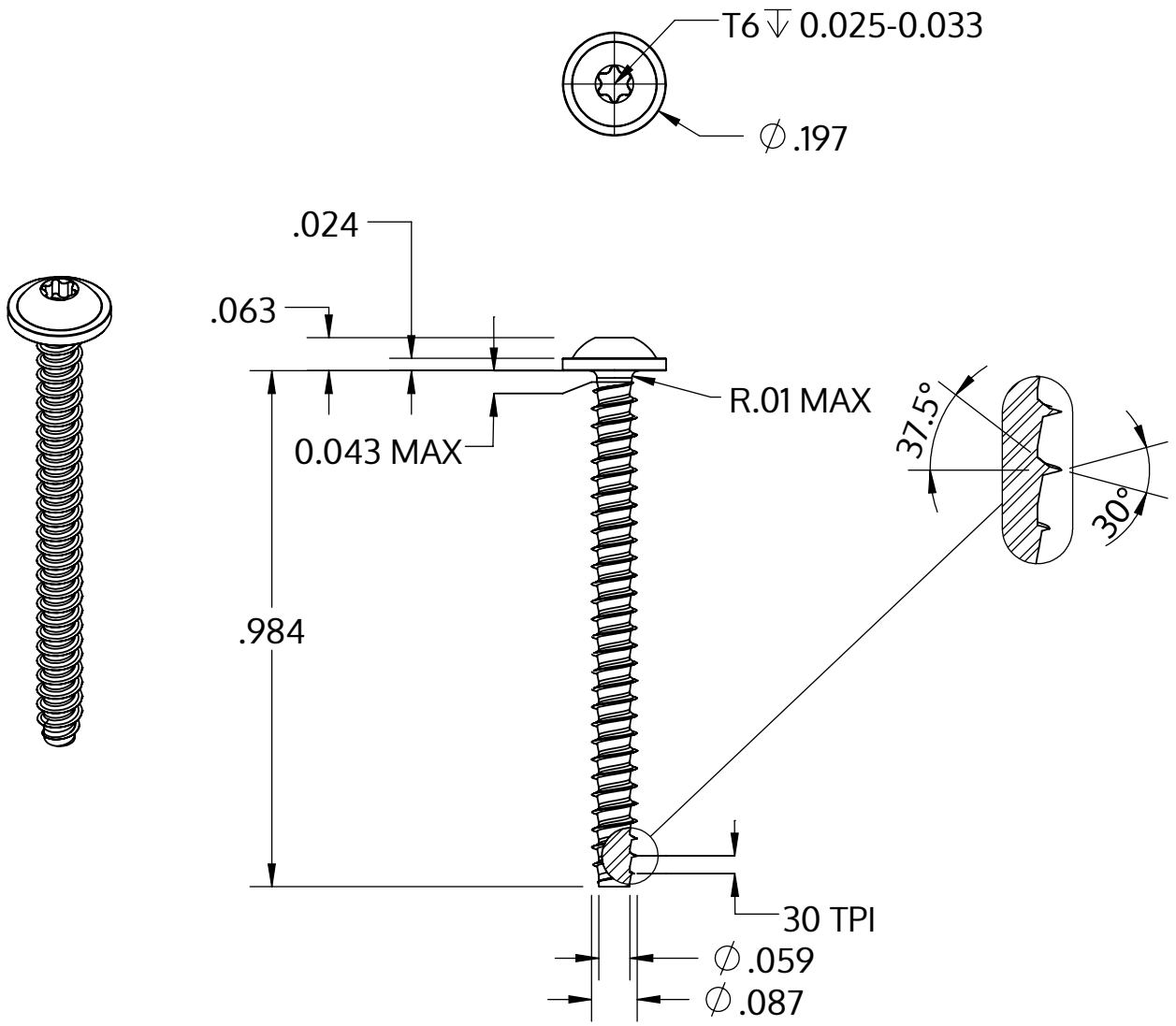

Metric size	M2.2 x 0.85 mm
US size (converted)	#2-30
	Tolerances [inch]
Length	+/- 0.025
Head diameter	+0 / -0.018
Head height	+/- 0.004
Thread diameter	+0.003 / -0

Description	STP38 2.2x25.0 - T6
Material	stainless-steel A2
Surface	bright, pickled and passivated
Weight	0.587 kg / 1000 pieces

SCREWERK	**STP380220250E**	
Inch Drawing Size A	Scale 3:1	2024-10