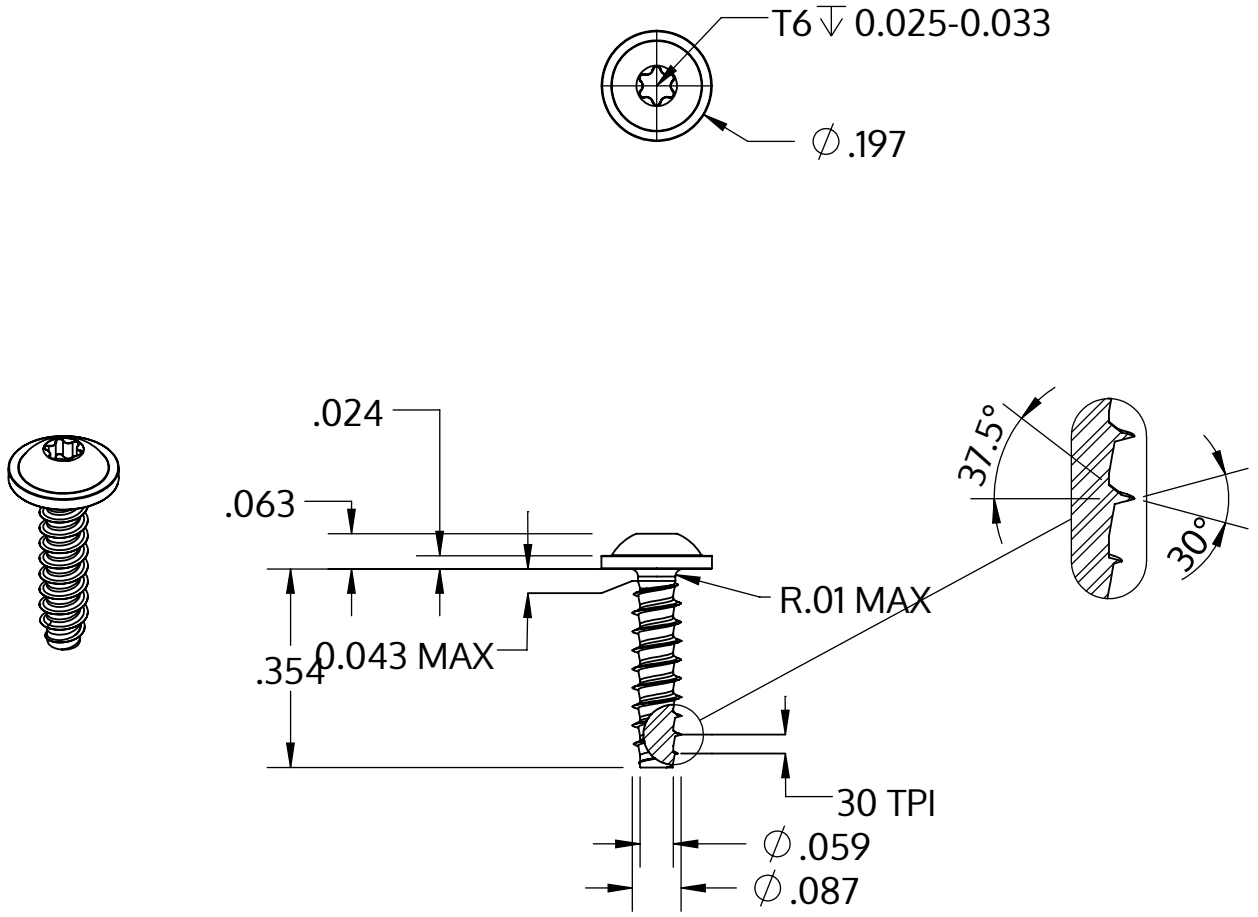


| | |
|---|---|
| Metric size | M2.2 x 0.85 mm |
| US size (converted) | #2-30 |
| | Tolerances [inch] |
| Length | +/- 0.017 |
| Head diameter | +0 / -0.018 |
| Head height | +/- 0.004 |
| Thread diameter | +0.003 / -0 |

| | |
|---|---|
| Descrizione | STP38 2.2x9.0 - T6 |
| Materiale | acciaio, temprato |
| Superficie | Placcato Zinco-Nichel, passivato nero, ricotto, sigillato |
| Peso | 0.290 kg / 1000 pezzi |

| | | |
|---|---|---|
| SCREWERK | **STP380220090B** | |
| _Zoll Zeichnung Größe A | Scala 3:1 | 2024-10 |