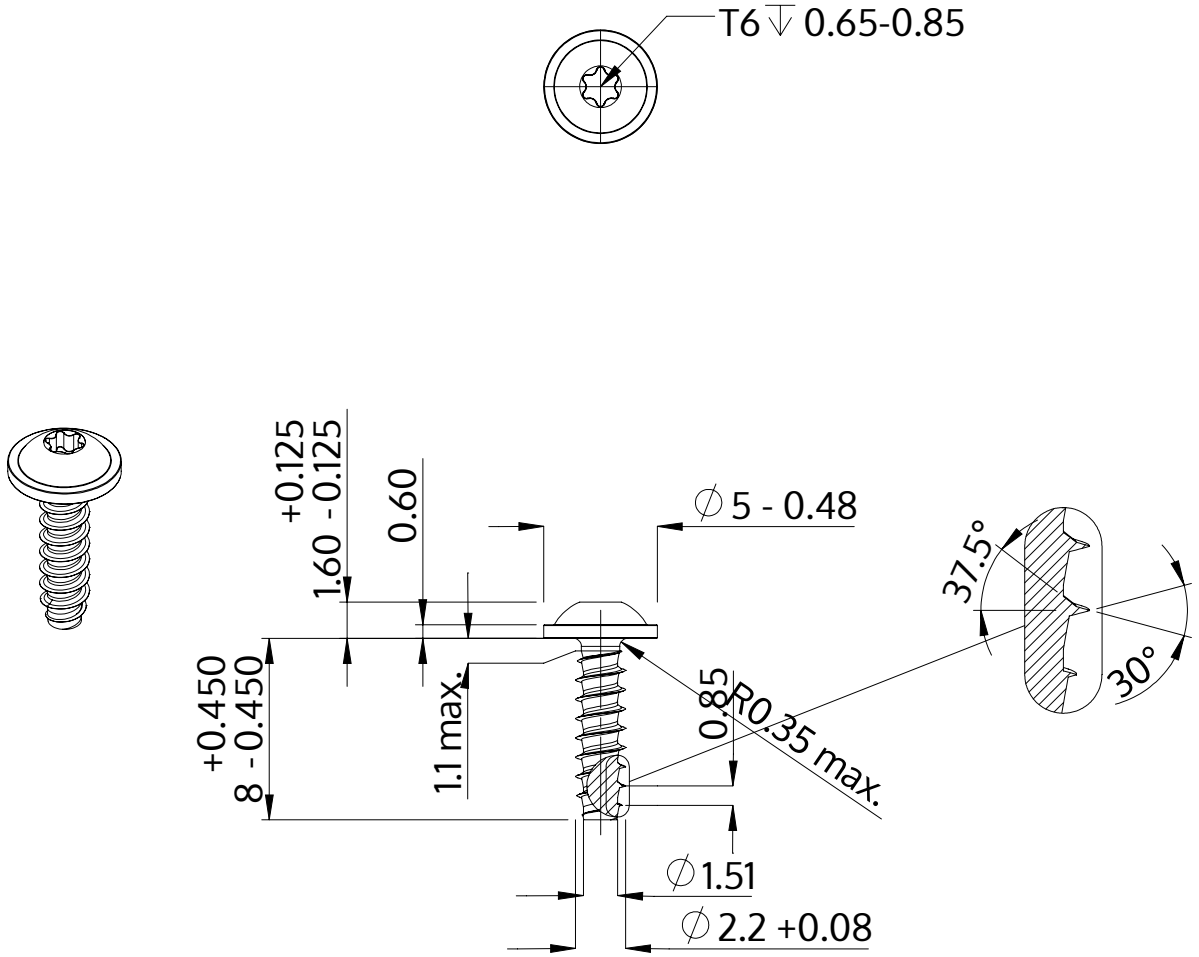

Description	STP38 2.2x8.0 - T6
Material	steel, hardened
Surface	Zinc-Nickel-plated min. 5µm, passivated black/ Cr-VI-free, baked, sealed
Weight	0.272 kg / 1000 pieces

SCREWERK	**STP380220080B**	
Metric Drawing A4	Scale None:1	2024-04