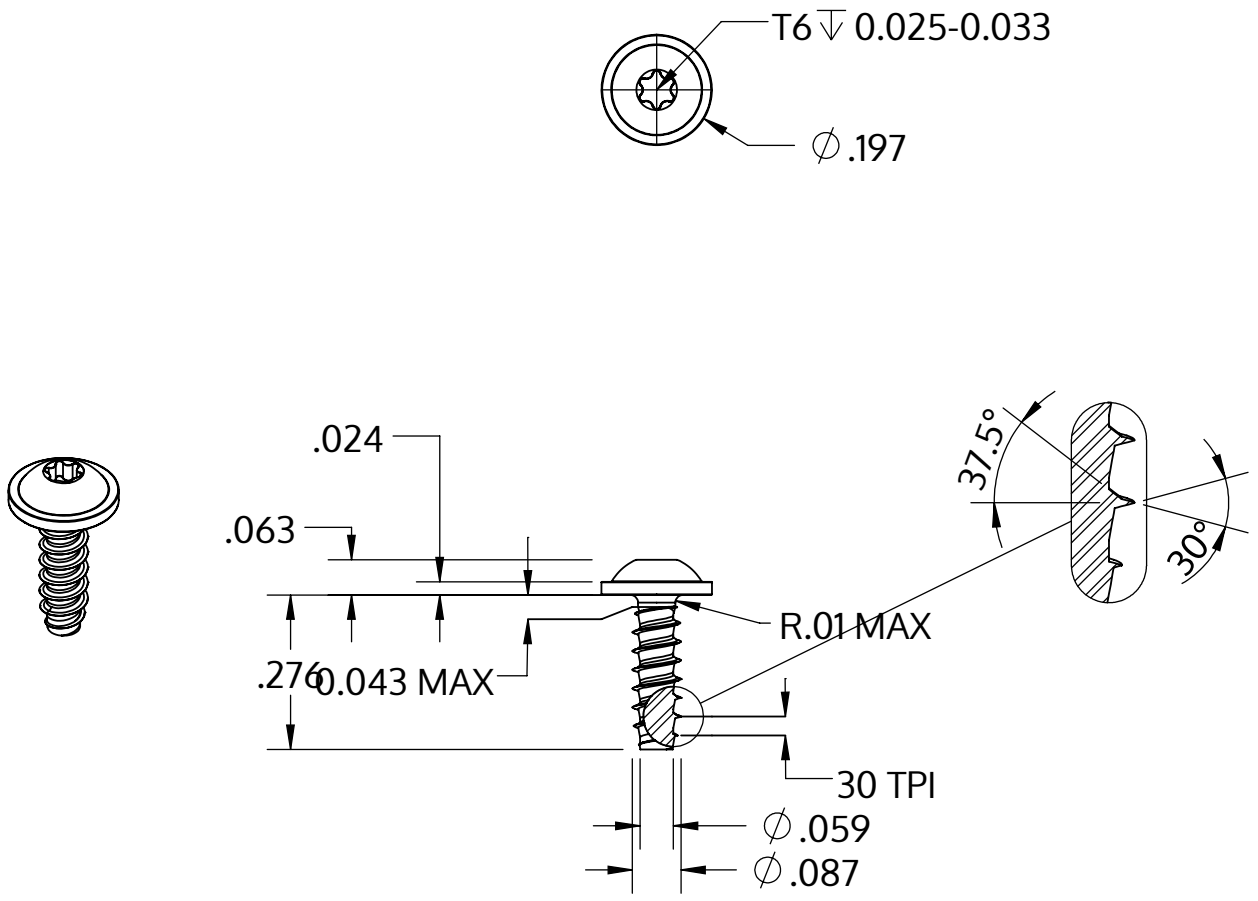

Metric size	M2.2 x 0.85 mm
US size (converted)	#2-30
	Tolerances [inch]
Length	+/- 0.017
Head diameter	+0 / -0.018
Head height	+/- 0.004
Thread diameter	+0.003 / -0

Description	STP38 2.2x7.0 - T6
Material	steel, hardened
Surface	Zinc-Nickel-plated min. 5µm, passivated black/ Cr-VI-free, baked, sealed
Weight	0.253 kg / 1000 pieces

SCREWERK	**STP380220070B**	
Inch Drawing Size A	Scale 3:1	2024-10