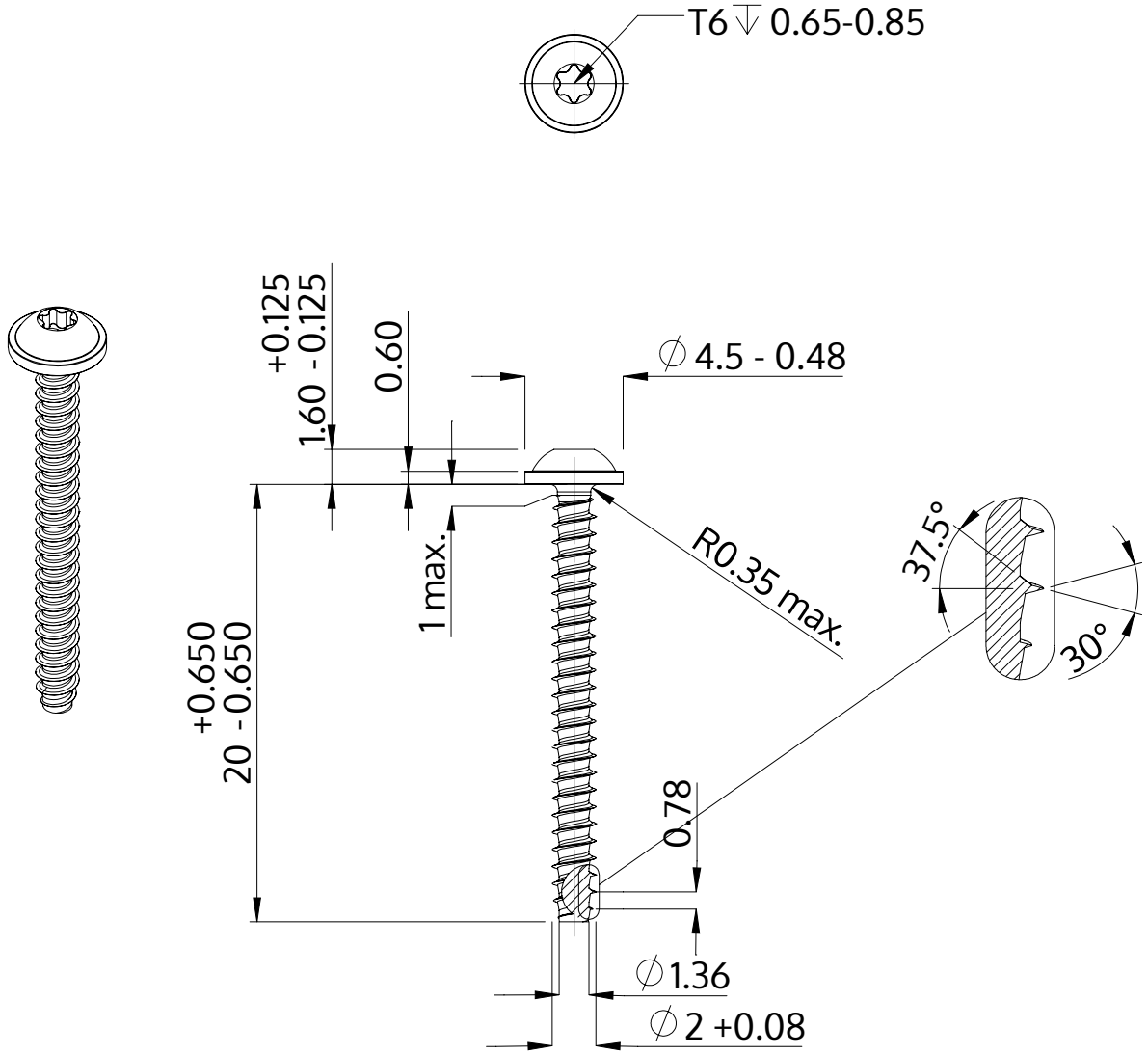

Description	STP38 2.0x20.0 - T6
Material	steel, hardened
Surface	zinc-plated 5-7 µm, baked, blue / transparent passivated
Weight	0.414 kg / 1000 pieces

SCREWERK	**STP380200200S**	
Metric Drawing A4	Scale 3:1	2024-10