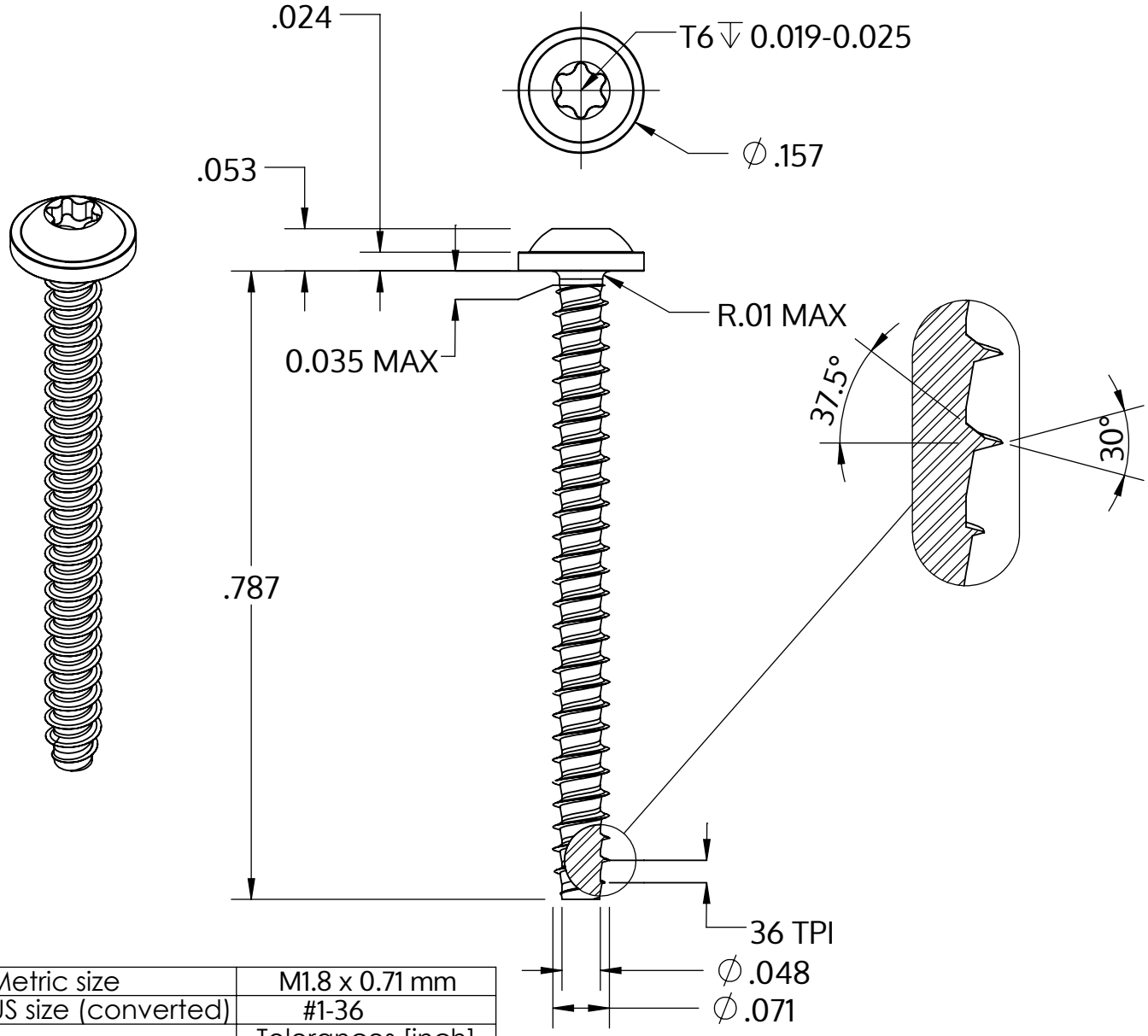

Metric size	M1.8 x 0.71 mm
US size (converted)	#1-36
	Tolerances [inch]
Length	+/- 0.025
Head diameter	+0 / -0.018
Head height	+/- 0.004
Thread diameter	+0.003 / -0

Description	STP38 1.8x20.0 - T6
Material	steel, hardened
Surface	zinc-plated 5-7 µm, baked, blue / transparent passivated
Weight	0.322 kg / 1000 pieces

SCREWERK	**STP380180200S**	
Inch Drawing Size A	Scale None:1	2024-04