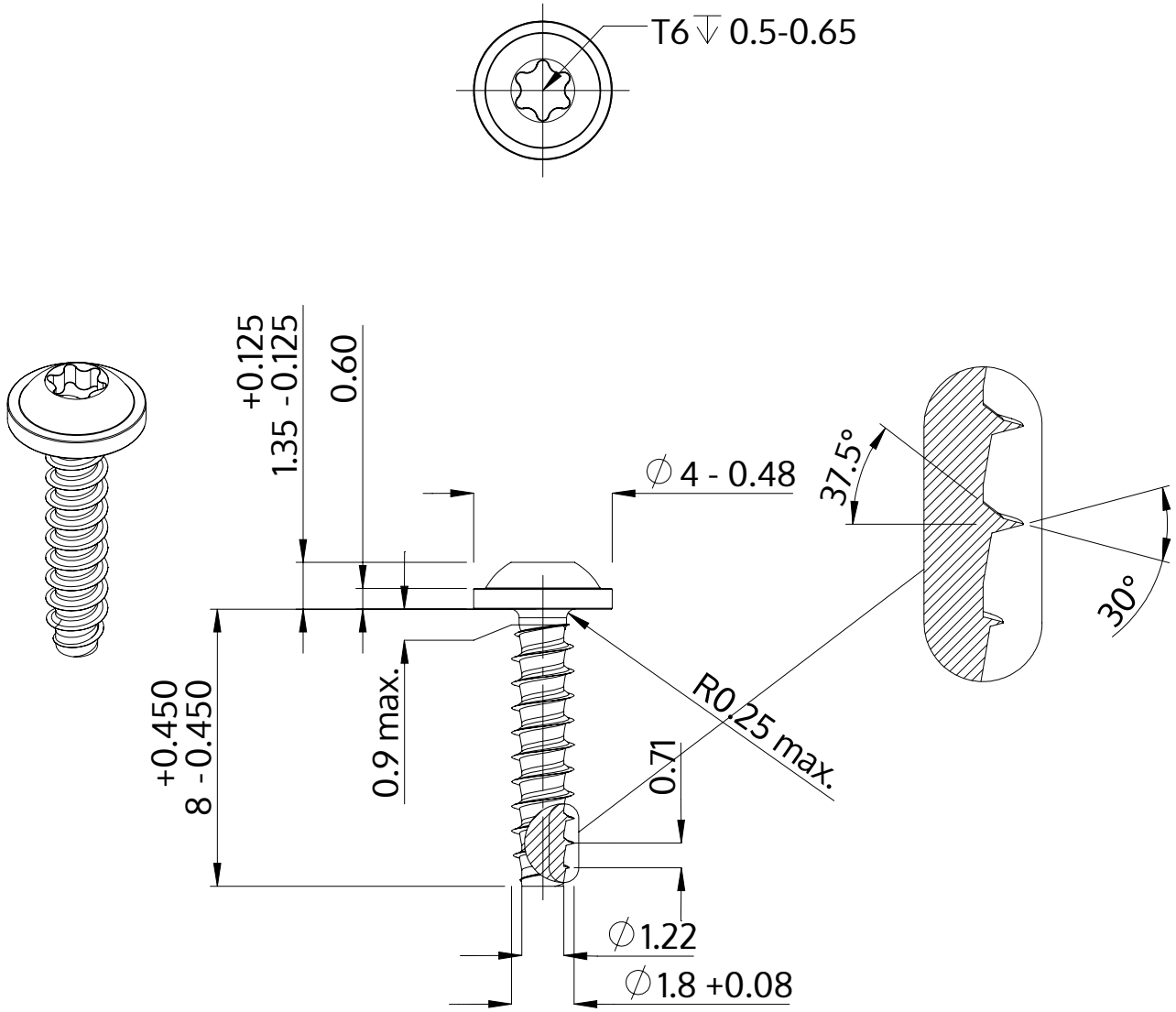

Description	STP38 1.8x8.0 - T6
Material	steel, hardened
Surface	Zinc-Nickel-plated min. 5µm, passivated black/ Cr-VI-free, baked, sealed
Weight	0.173 kg / 1000 pieces

SCREWERK	**STP380180080B**	
Metric Drawing A4	Scale 5:1	2024-10