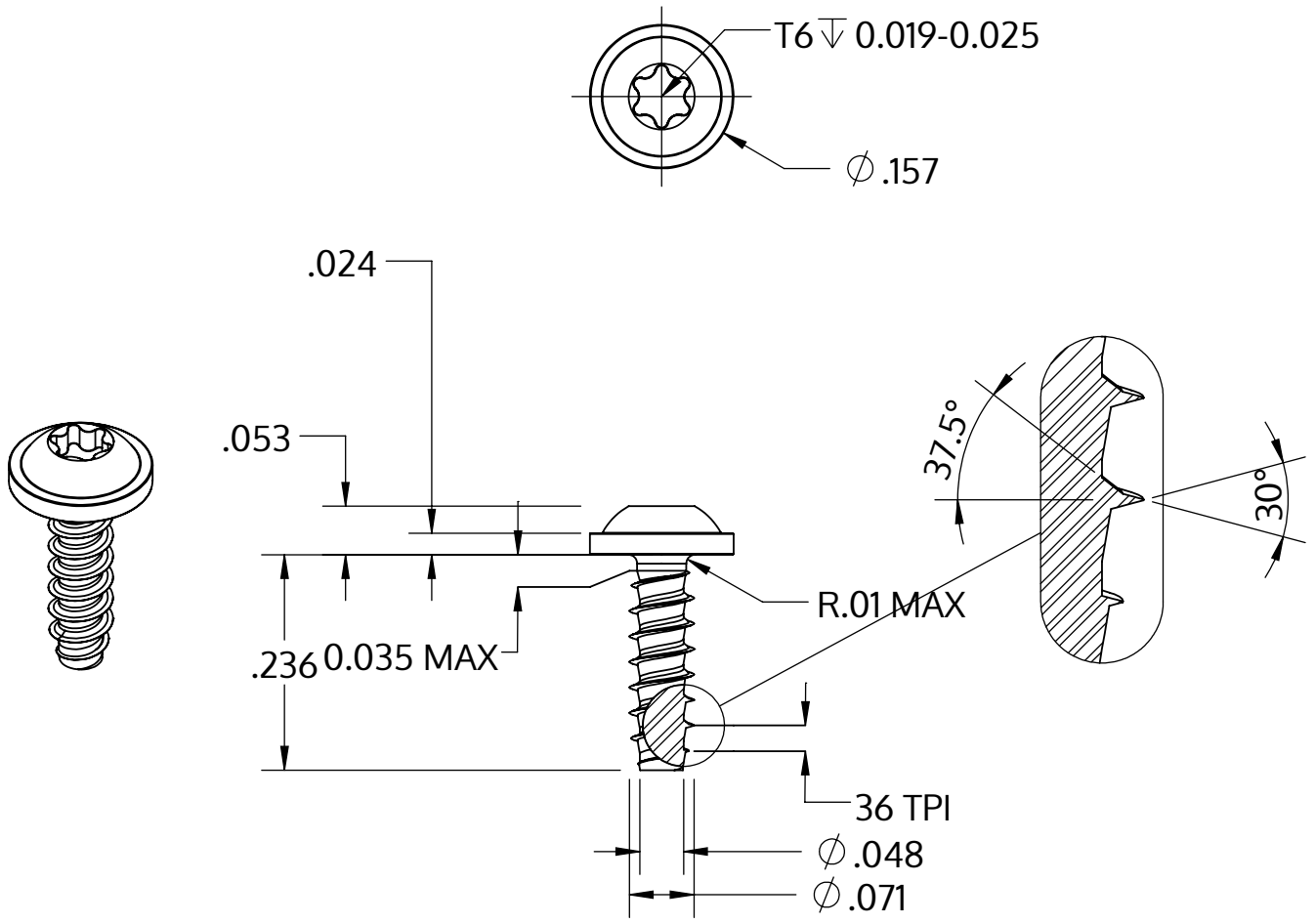

Metric size	M1.8 x 0.71 mm
US size (converted)	#1-36
	Tolerances [inch]
Length	+/- 0.014
Head diameter	+0 / -0.018
Head height	+/- 0.004
Thread diameter	+0.003 / -0

Description	STP38 1.8x6.0 - T6
Material	steel, hardened
Surface	Zinc-Nickel-plated min. 5µm, passivated black/ Cr-VI-free, baked, sealed
Weight	0.148 kg / 1000 pieces

SCREWERK	**STP380180060B**	
Inch Drawing Size A	Scale None:1	2024-04