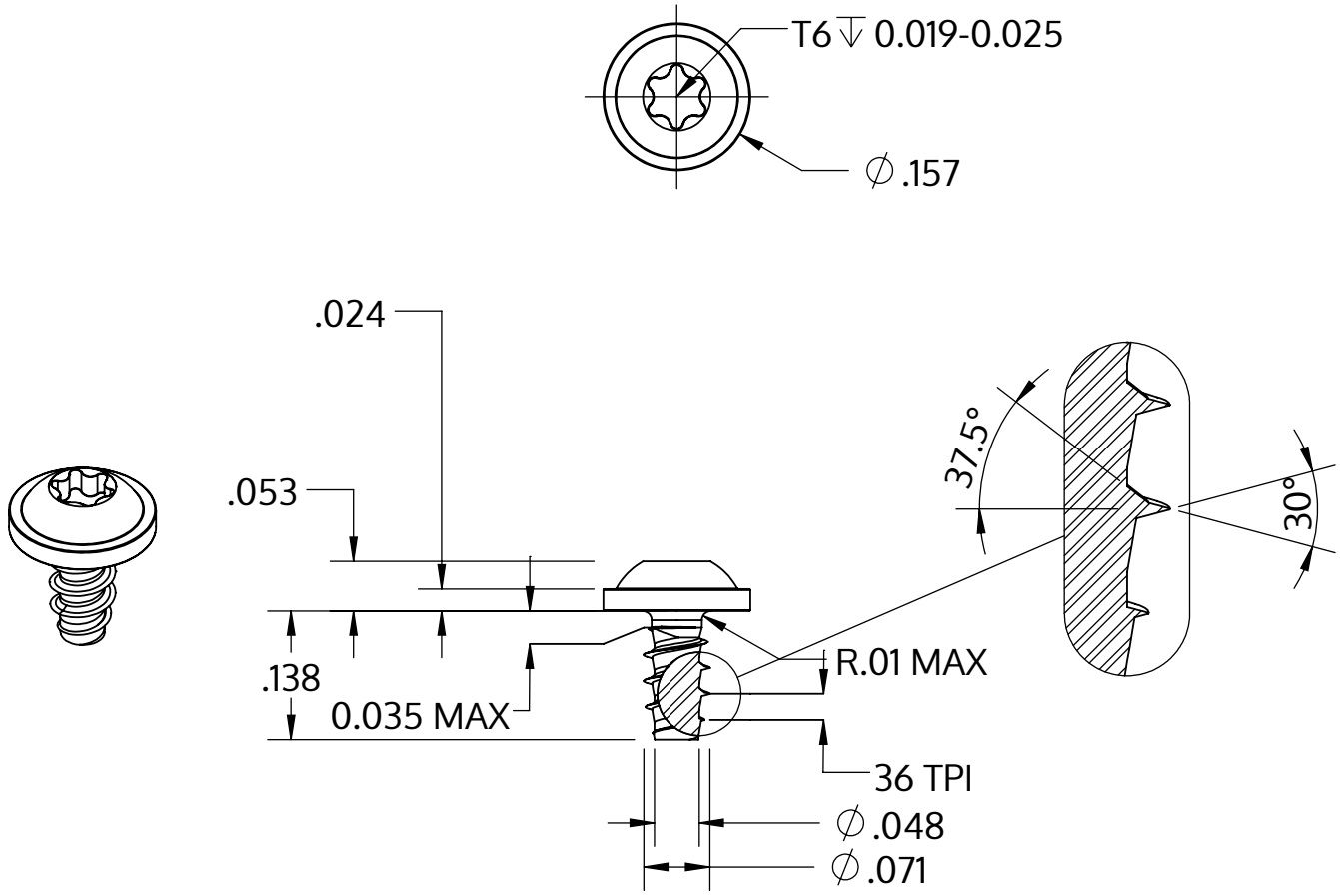


| | |
|---|---|
| Metric size | M1.8 x 0.71 mm |
| US size (converted) | #1-36 |
| | Tolerances [inch] |
| Length | +/- 0.014 |
| Head diameter | +0 / -0.018 |
| Head height | +/- 0.004 |
| Thread diameter | +0.003 / -0 |

| | |
|---|---|
| Description | STP38 1.8x3.5 - T6 |
| Matière | Acier,trempé et revenu |
| Surface | Zinc Nickel passivé noir, trempée, scéllée |
| Poids | 0.117 kg / 1000 Unité |

| | | |
|---|---|---|
| SCREWERK | **STP380180035B** | |
| _Zoll Zeichnung Größe A | Redimensionner 5:1 | 2024-10 |