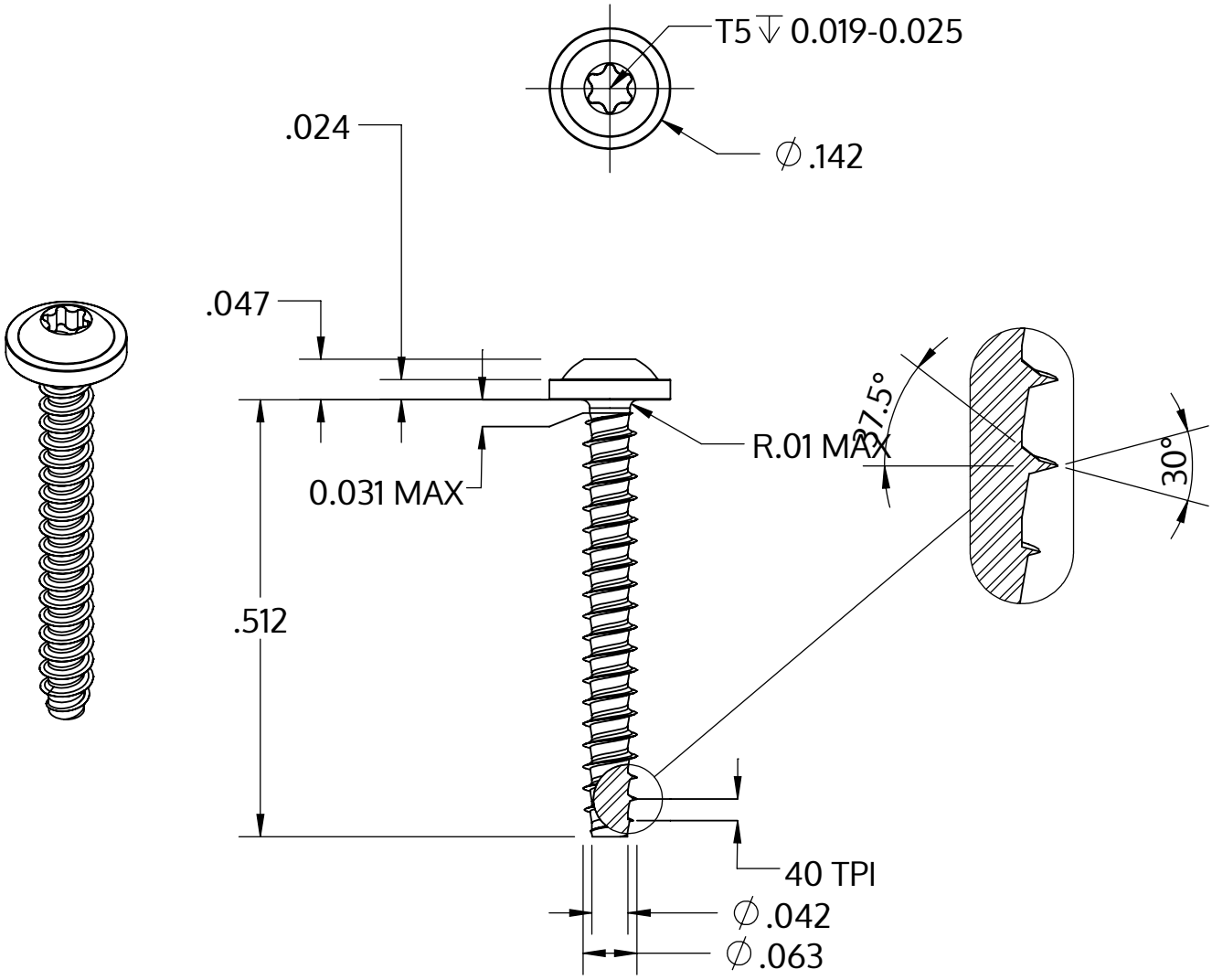

Metric size	M1.6 x 0.64 mm
US size (converted)	#0.5-40
	Tolerances [inch]
Length	+/- 0.021
Head diameter	+0 / -0.018
Head height	+/- 0.004
Thread diameter	+0.003 / -0

Description	STP38 1.6x13.0 - T5
Material	stainless-steel A2
Surface	bright, pickled and passivated
Weight	0.182 kg / 1000 pieces

SCREWERK	**STP380160130E**	
Inch Drawing Size A	Scale None:1	2024-04