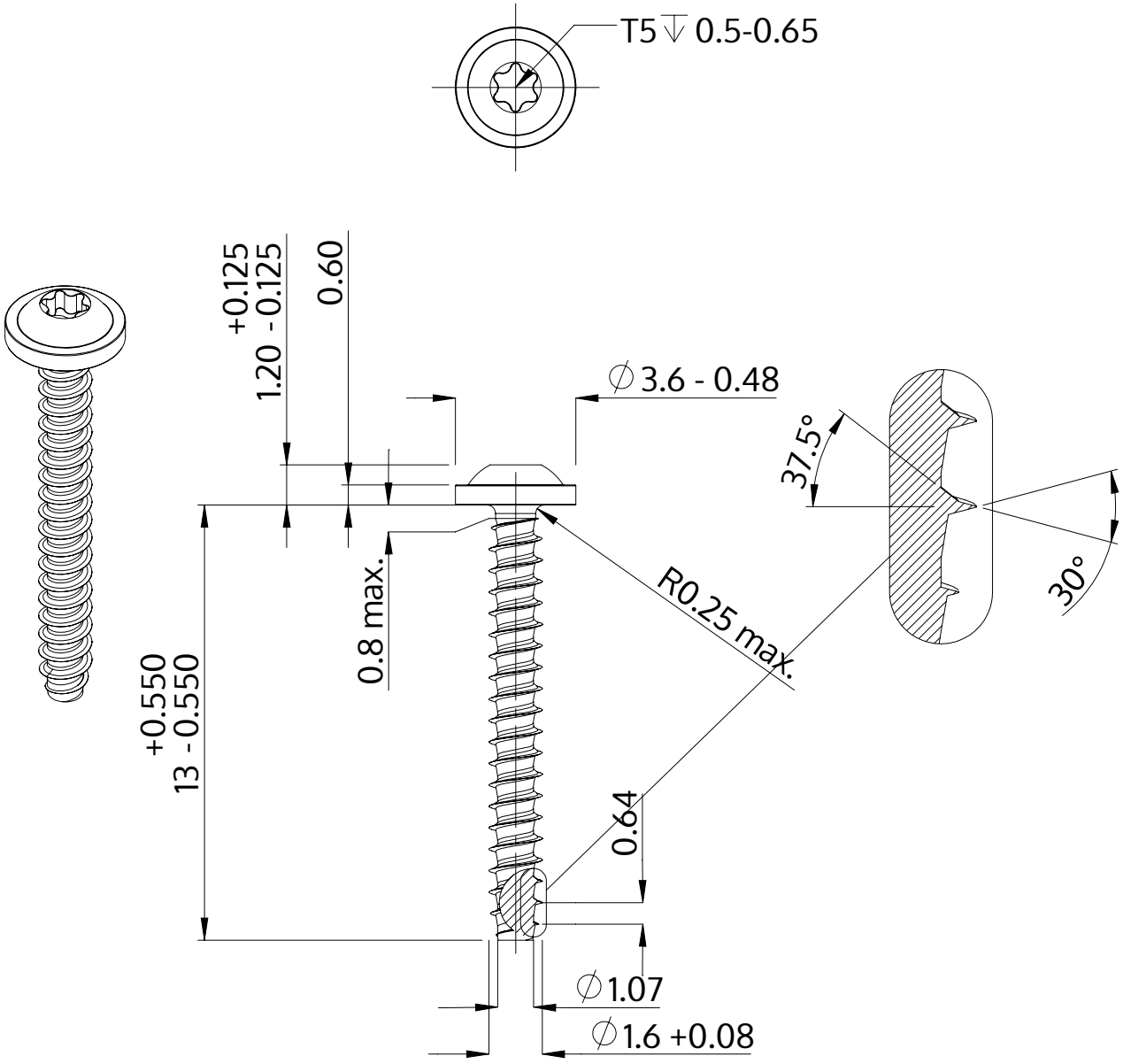

Description	STP38 1.6x13.0 - T5
Material	steel, hardened
Surface	Zinc-Nickel-plated min. 5µm, passivated black/ Cr-VI-free, baked, sealed
Weight	0.182 kg / 1000 pieces

SCREWERK	**STP380160130B**	
Metric Drawing A4	Scale 5:1	2024-10