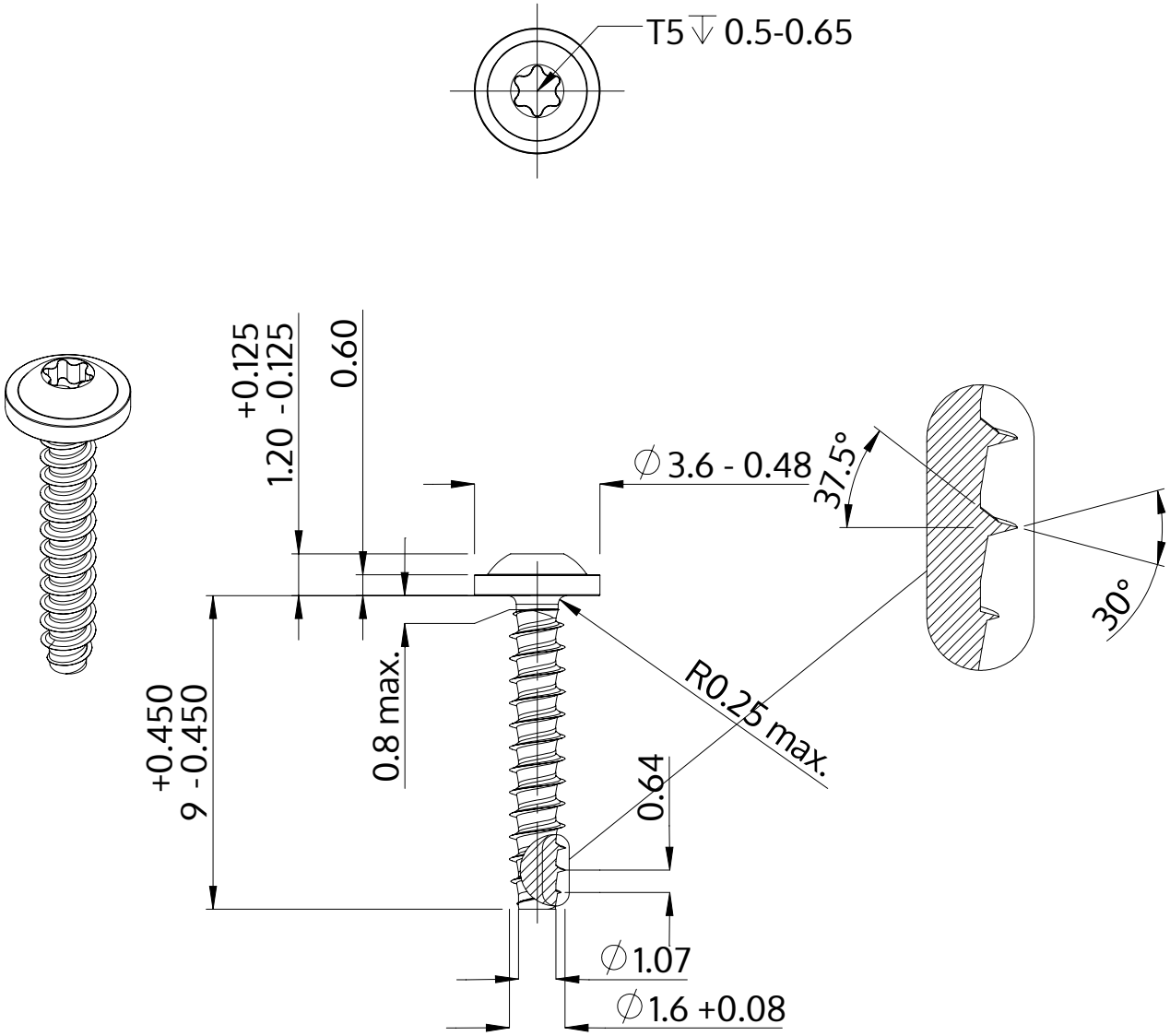

Description	STP38 1.6x9.0 - T5
Material	steel, hardened
Surface	zinc-plated 5-7 µm, baked, blue / transparent passivated
Weight	0.143 kg / 1000 pieces

SCREWERK	**STP380160090S**	
Metric Drawing A4	Scale 5:1	2024-10