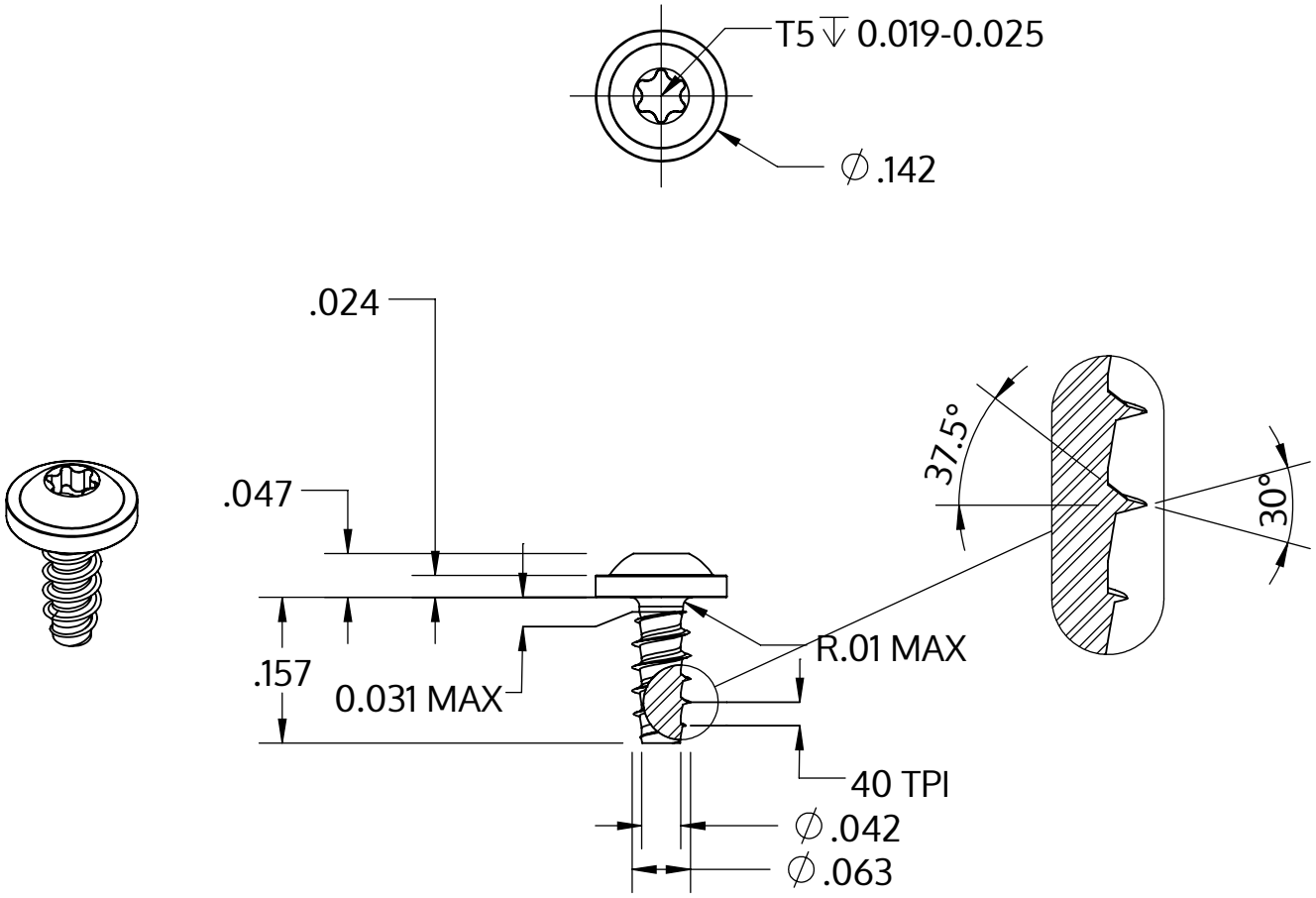


| | |
|---|---|
| Metric size | M1.6 x 0.64 mm |
| US size (converted) | #0.5-40 |
| | Tolerances [inch] |
| Length | +/- 0.014 |
| Head diameter | +0 / -0.018 |
| Head height | +/- 0.004 |
| Thread diameter | +0.003 / -0 |

| | |
|---|---|
| Description | STP38 1.6x4.0 - T5 |
| Material | steel, hardened |
| Surface | zinc-plated 5-7 µm, baked, blue / transparent passivated |
| Weight | 0.094 kg / 1000 pieces |

| | | |
|---|---|---|
| SCREWERK | **STP380160040S** | |
| Inch Drawing Size A | Scale 5:1 | 2024-05 |