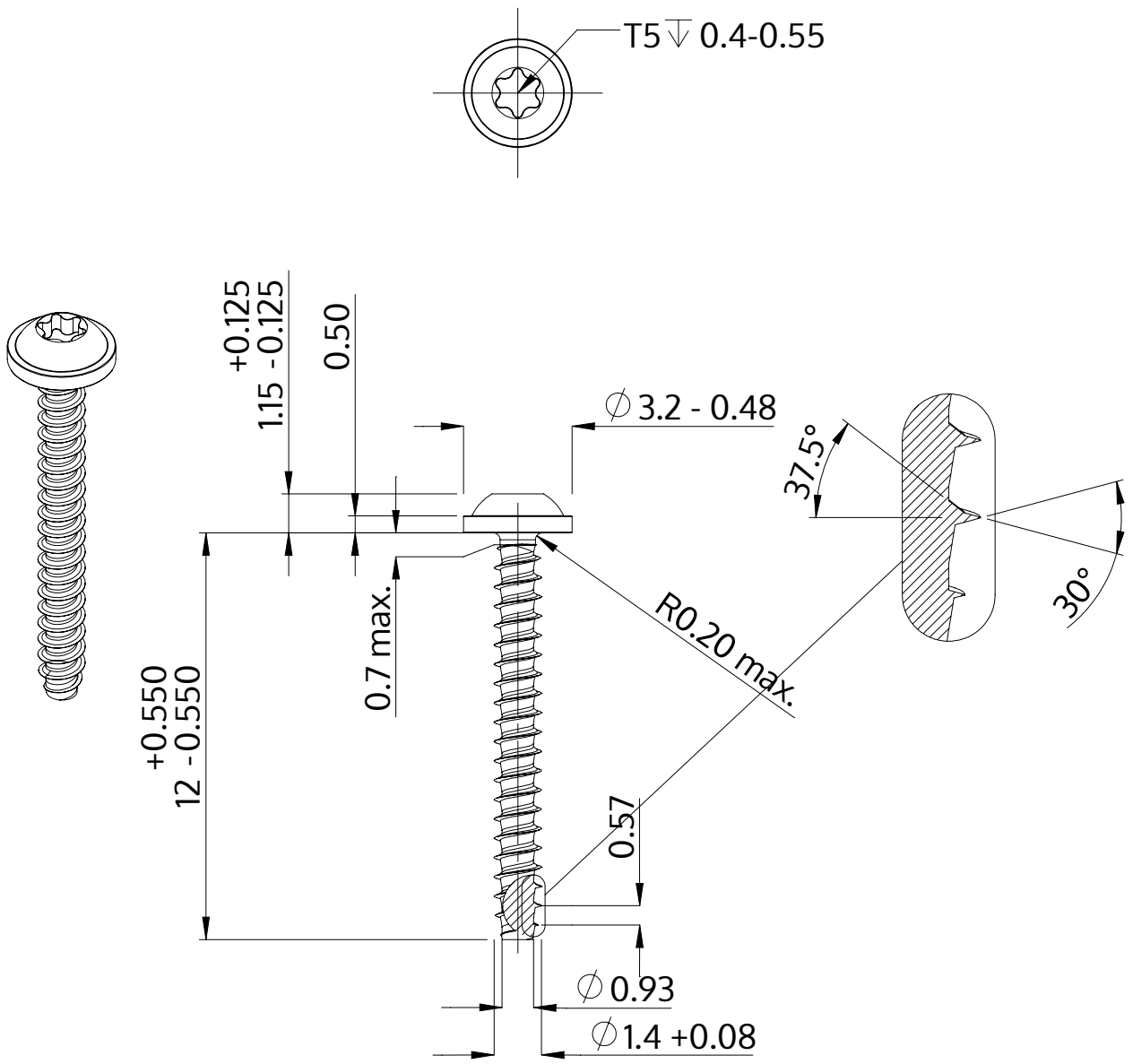

Description	STP38 1.4x12.0 - T5
Material	steel, hardened
Surface	Zinc-Nickel-plated min. 5µm, passivated black/ Cr-VI-free, baked, sealed
Weight	0.129 kg / 1000 pieces

SCREWERK	**STP380140120B**	
Metric Drawing A4	Scale None:1	2024-04