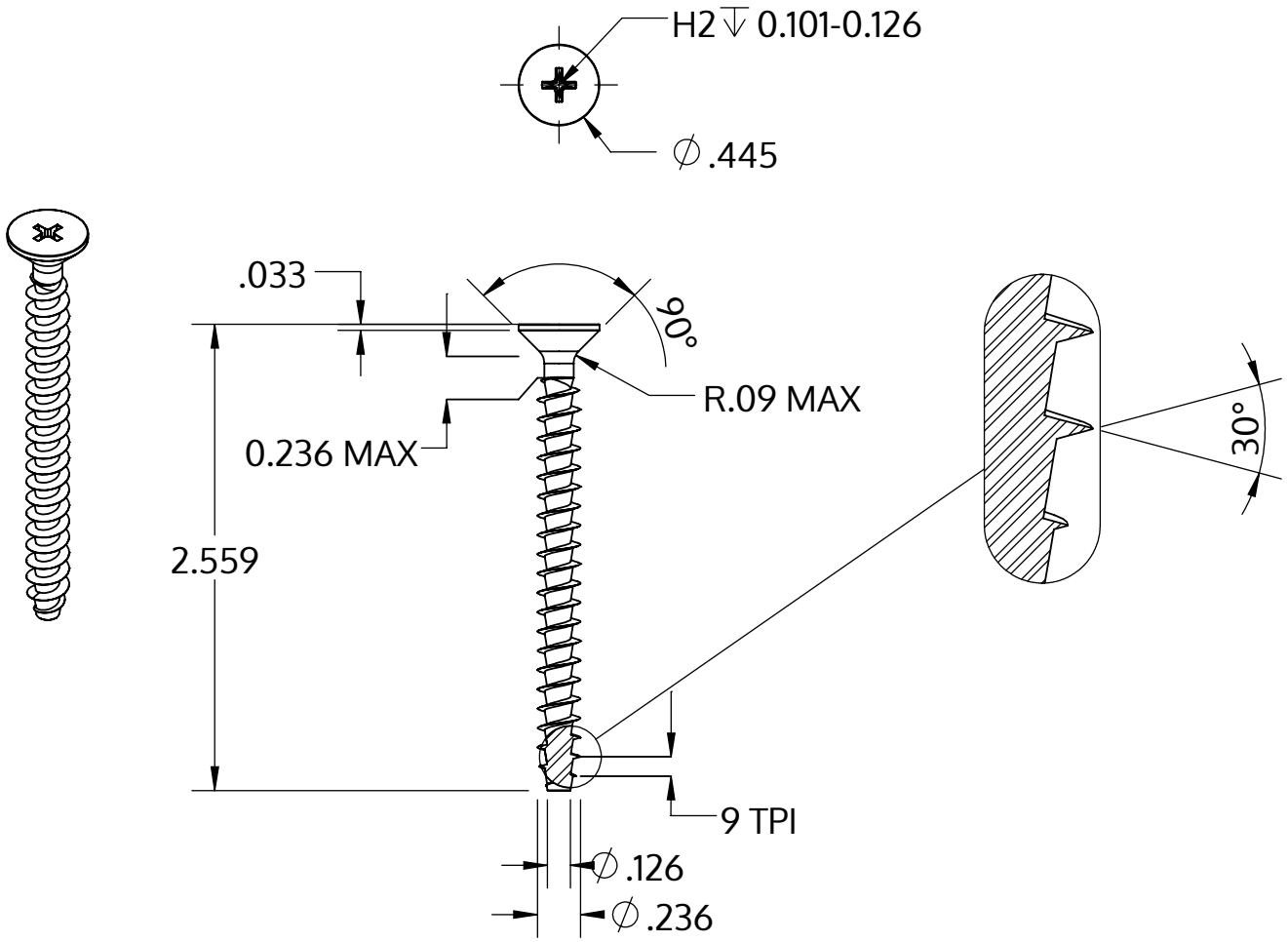

Metric size	M6 x 2.69 mm
US size (converted)	#0.236-9
	Tolerances [inch]
Length	+/- 0.037
Head diameter	+0 / -0.016
Head height	
Thread diameter	+0.007 / -0

Descriere	STP33A 6.0x65.0 - H2
Material	oțel, călit
Exterior	zincat 5-7 µm, recopt, pasivat transparent/albastru
Greutate	7.769 kg / 1000 unități

SCREWERK	**STP33A0600650S**	
_Zoll Zeichnung Größe A	Scalarea 1:1	2024-10