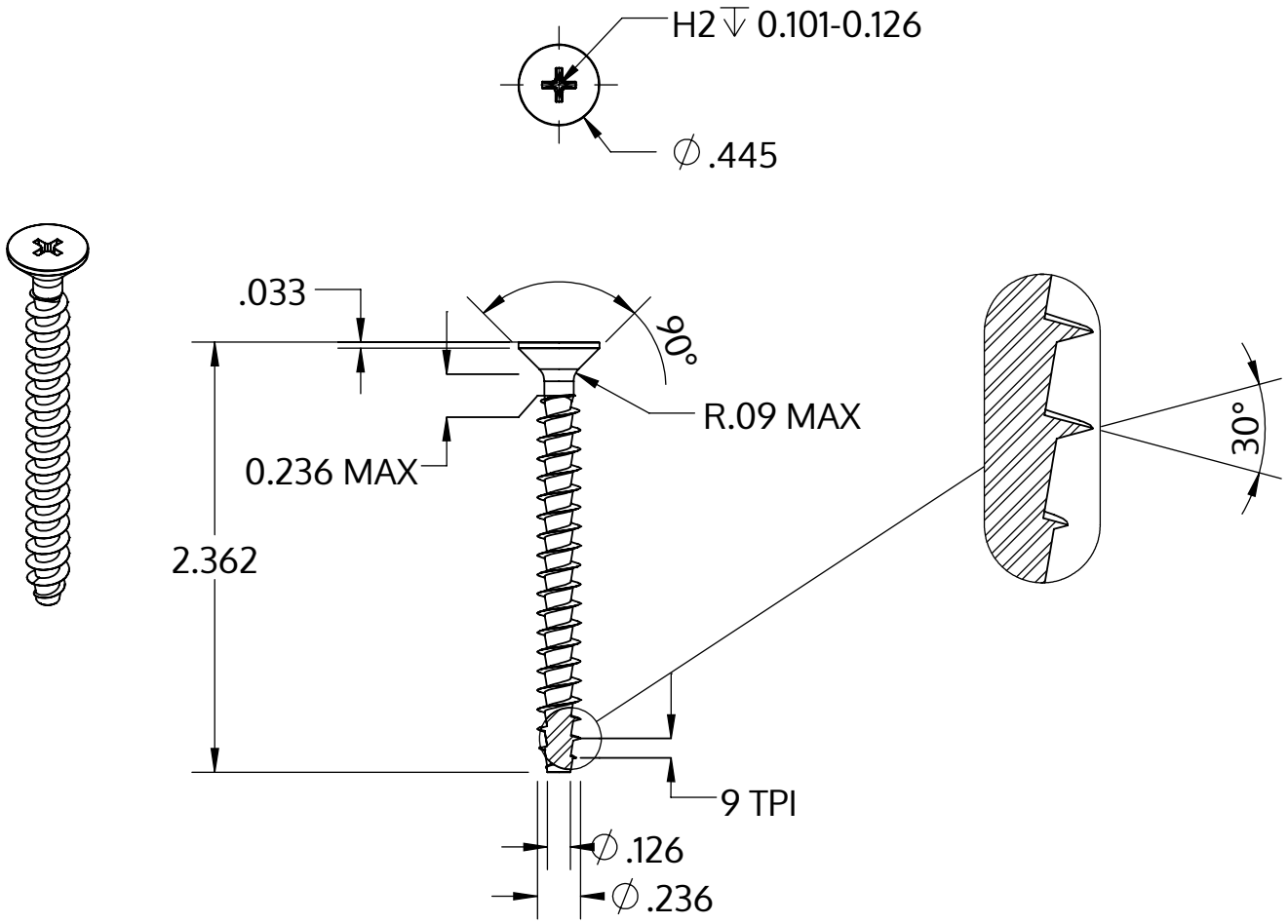

Metric size	M6 x 2.69 mm
US size (converted)	#0.236-9
	Tolerances [inch]
Length	+/- 0.037
Head diameter	+0 / -0.016
Head height	
Thread diameter	+0.007 / -0

Beskrivning	STP33A 6.0x60.0 - H2
Material	rostfritt stål A2
Yta	blank och passiviserad
Vikt	7.259 kg / 1000 styck

SCREWERK	**STP33A0600600E**	
_Zoll Zeichnung Größe A	Skala None:1	2024-04