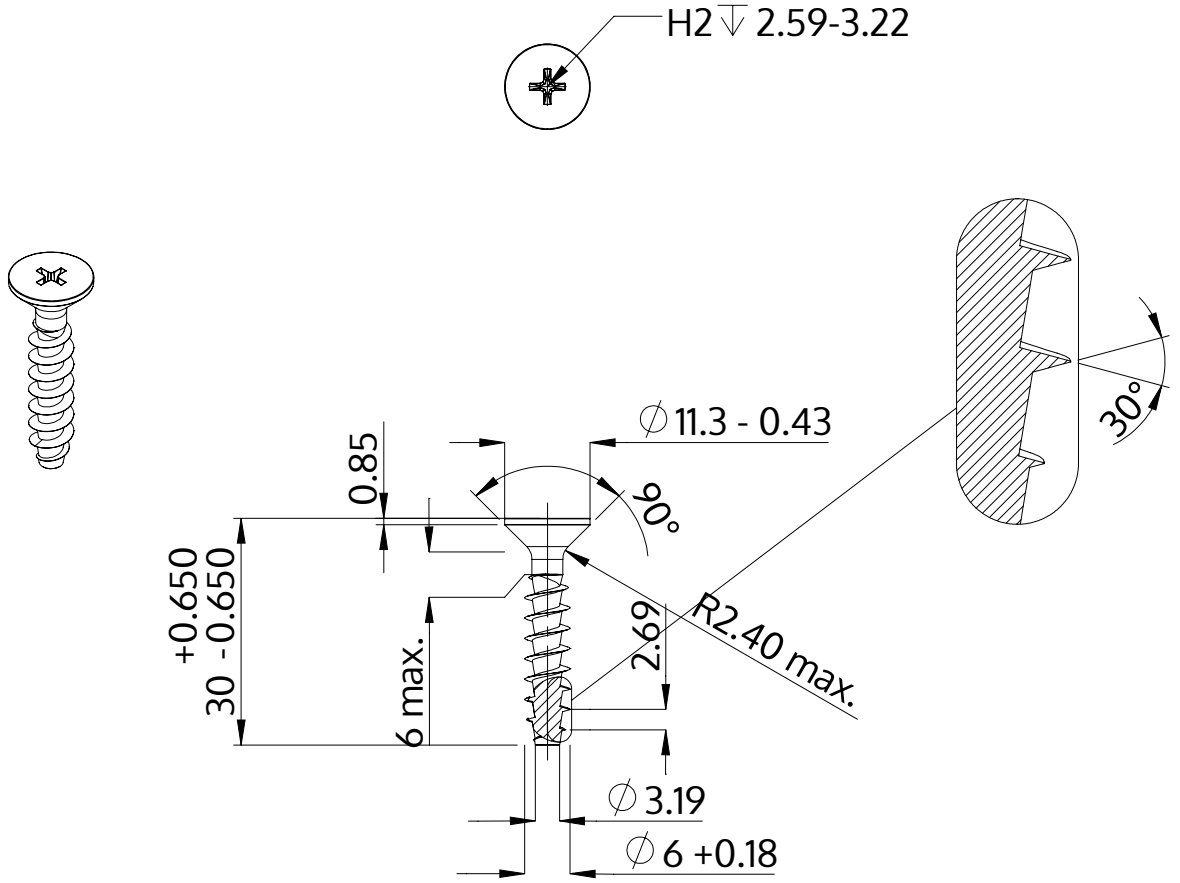

Description	STP33A 6.0x30.0 - H2
Material	steel, hardened
Surface	zinc-plated 5-7 µm, baked, blue / transparent passivated
Weight	4.195 kg / 1000 pieces

SCREWERK	**STP33A0600300S**	
Metric Drawing A4	Scale 1:1	2024-10