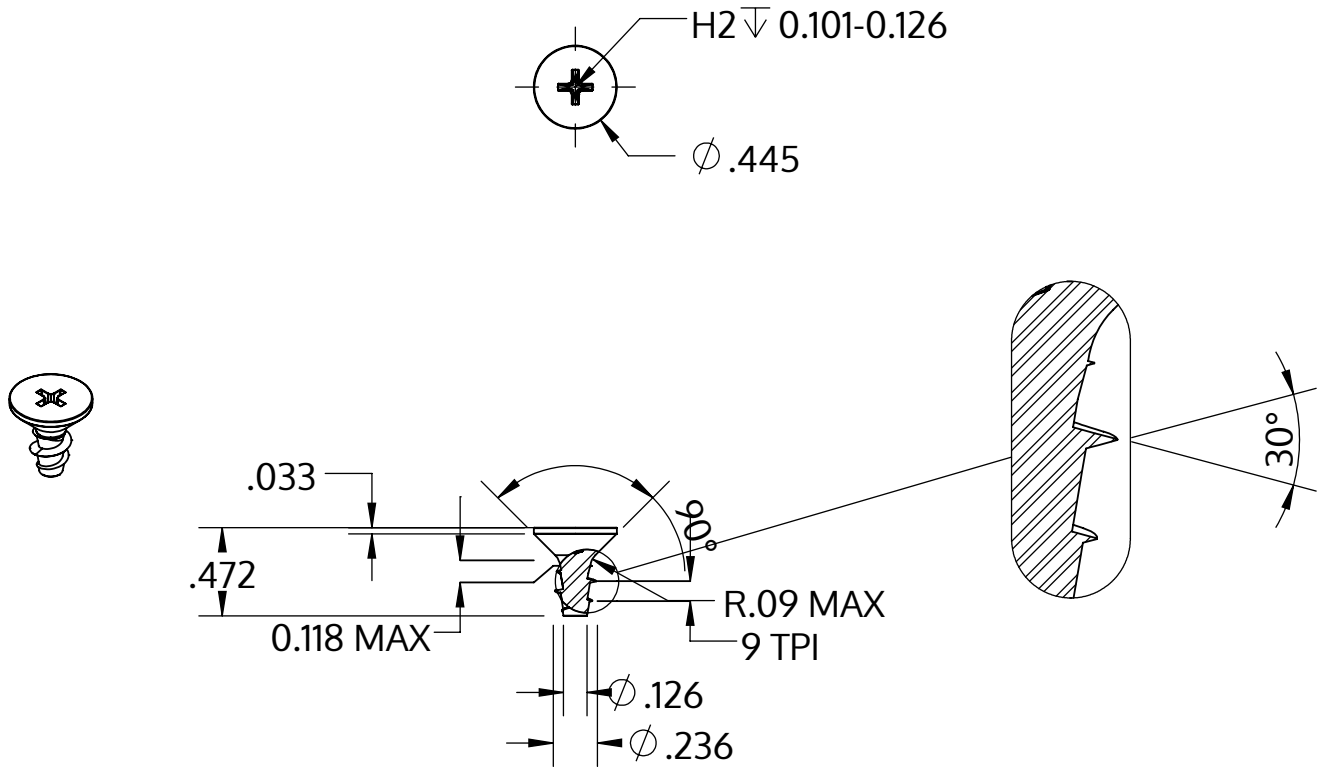


| | |
|---|---|
| Metric size | M6 x 2.69 mm |
| US size (converted) | #0.236-9 |
| | Tolerances [inch] |
| Length | +/- 0.021 |
| Head diameter | +0 / -0.016 |
| Head height | |
| Thread diameter | +0.007 / -0 |

| | |
|---|---|
| Beschrijving | STP33A 6.0x12.0 - H2 |
| Materiaal | veredeld staal |
| Oppervlak | verzinkt 5-7 µm, getempert, blauw / transparant gepassiveerd |
| Gewicht | 2.357 kg / 1000 stuk |

| | | |
|---|---|---|
| SCREWERK | **STP33A0600120S** | |
| _Zoll Zeichnung Größe A | Schaal 1:1 | 2024-10 |