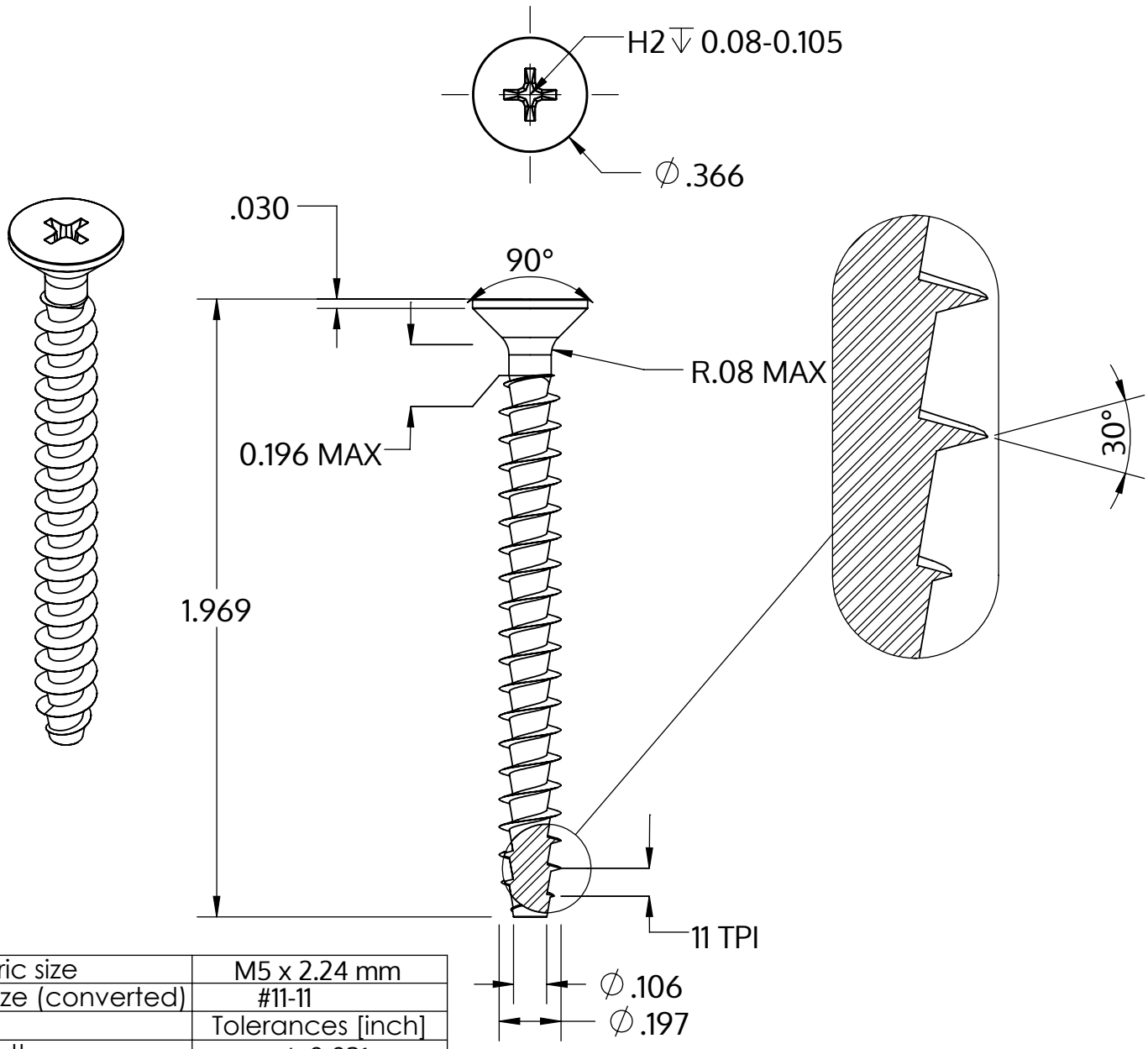

Metric size	M5 x 2.24 mm
US size (converted)	#11-11
	Tolerances [inch]
Length	+/- 0.031
Head diameter	+0 / -0.014
Head height	
Thread diameter	+0.007 / -0

Description	STP33A 5.0x50.0 - H2
Material	stainless-steel A2
Surface	bright, pickled and passivated
Weight	4.226 kg / 1000 pieces

SCREWERK

STP33A0500500E

Inch Drawing Size A	Scale 2:1	2024-10