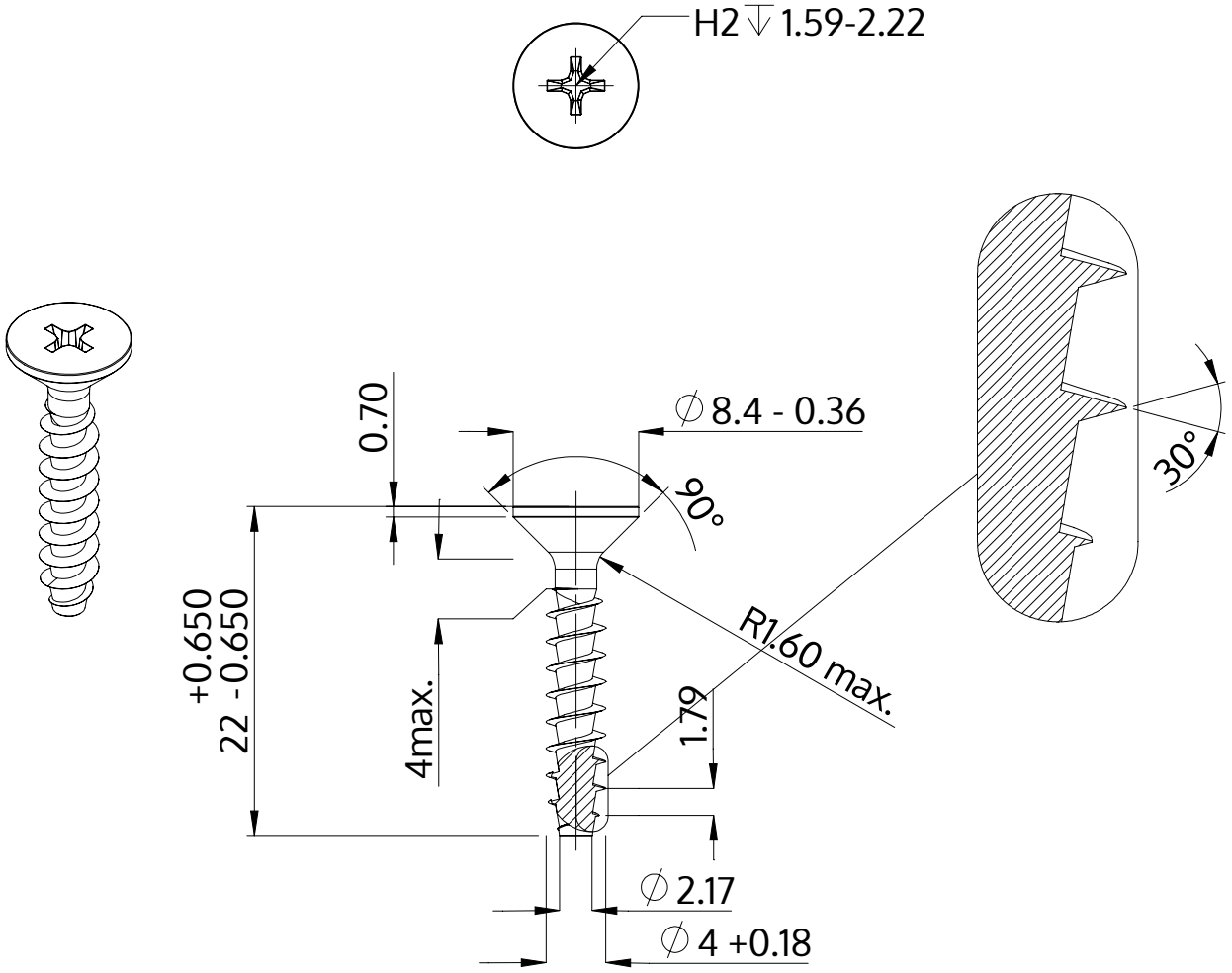

Description	STP33A 4.0x22.0 - H2
Material	stainless-steel A2
Surface	bright, pickled and passivated
Weight	1.529 kg / 1000 pieces

SCREWERK	**STP33A0400220E**	
Metric Drawing A4	Scale 2:1	2024-10