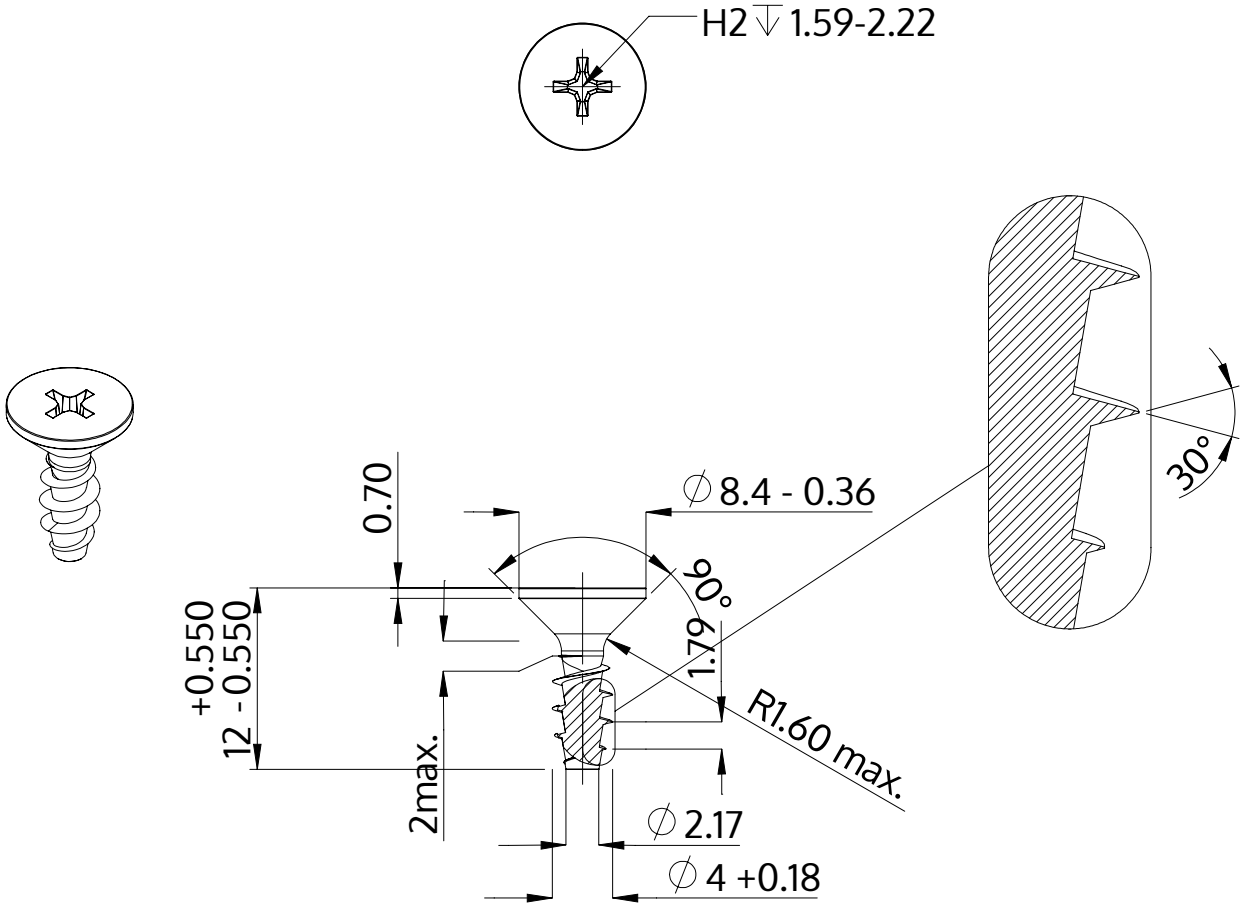

Description	STP33A 4.0x12.0 - H2
Material	steel, hardened
Surface	zinc-plated 5-7 µm, baked, blue / transparent passivated
Weight	1.046 kg / 1000 pieces

SCREWERK	**STP33A0400120S**	
Metric Drawing A4	Scale None:1	2024-04