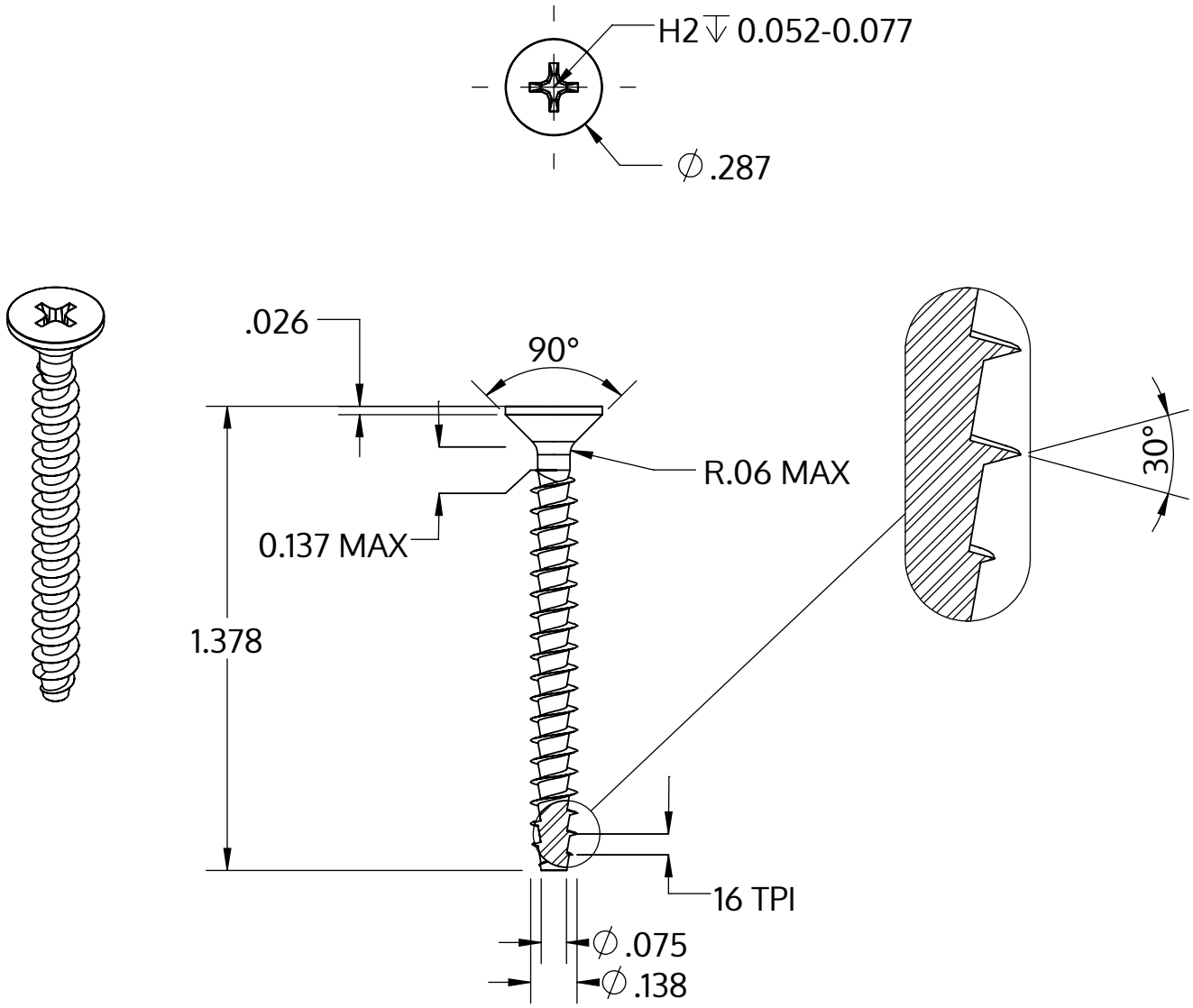

Metric size	M3.5 x 1.57 mm
US size (converted)	#6-16
	Tolerances [inch]
Length	+/- 0.031
Head diameter	+0 / -0.014
Head height	
Thread diameter	+0.007 / -0

Descriere	STP33A 3.5x35.0 - H2
Material	oțel, călit
Exterior	zincat 5-7 µm, recopt, pasivat transparent/albastru
Greutate	1.572 kg / 1000 unități

SCREWERK	**STP33A0350350S**	
_Zoll Zeichnung Größe A	Scalarea 2:1	2024-10