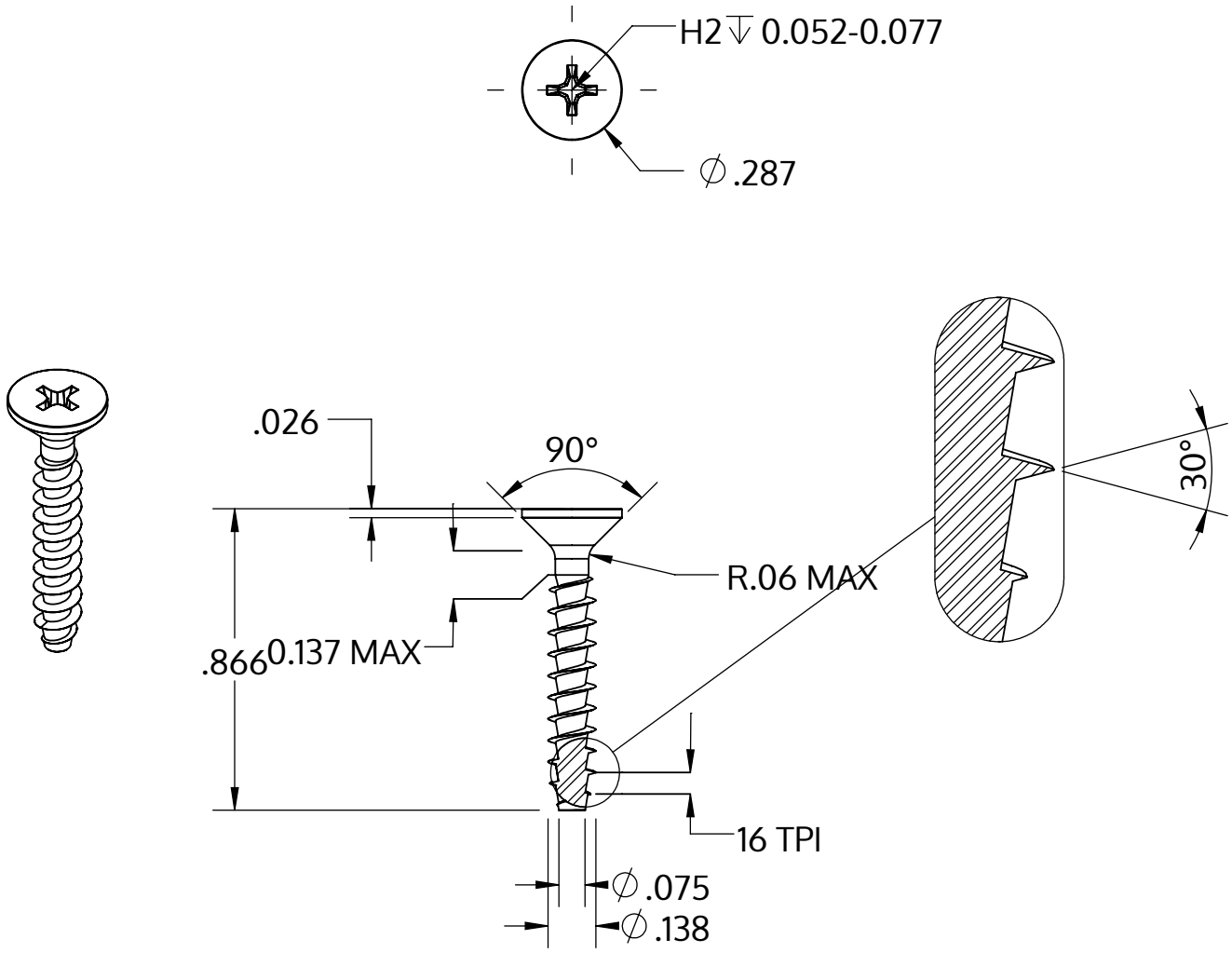

Metric size	M3.5 x 1.57 mm
US size (converted)	#6-16
	Tolerances [inch]
Length	+/- 0.025
Head diameter	+0 / -0.014
Head height	
Thread diameter	+0.007 / -0

Description	STP33A 3.5x22.0 - H2
Material	steel, hardened
Surface	zinc-plated 5-7 µm, baked, blue / transparent passivated
Weight	1.089 kg / 1000 pieces

SCREWERK	**STP33A0350220S**	
Inch Drawing Size A	Scale 2:1	2024-10