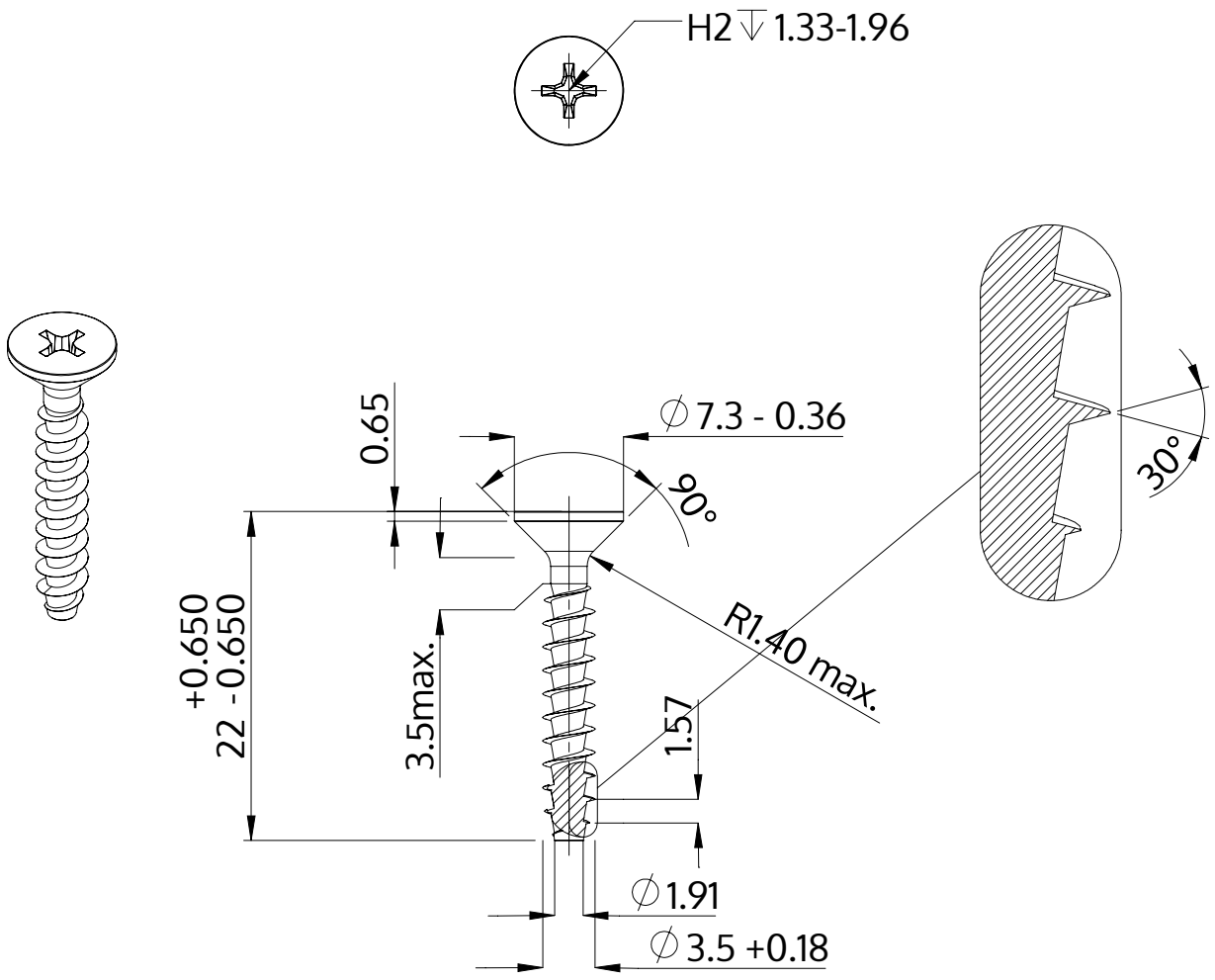

Description	STP33A 3.5x22.0 - H2
Material	steel, hardened
Surface	zinc-plated 5-7 µm, baked, blue / transparent passivated
Weight	1.089 kg / 1000 pieces

SCREWERK	**STP33A0350220S**	
Metric Drawing A4	Scale 2:1	2024-10