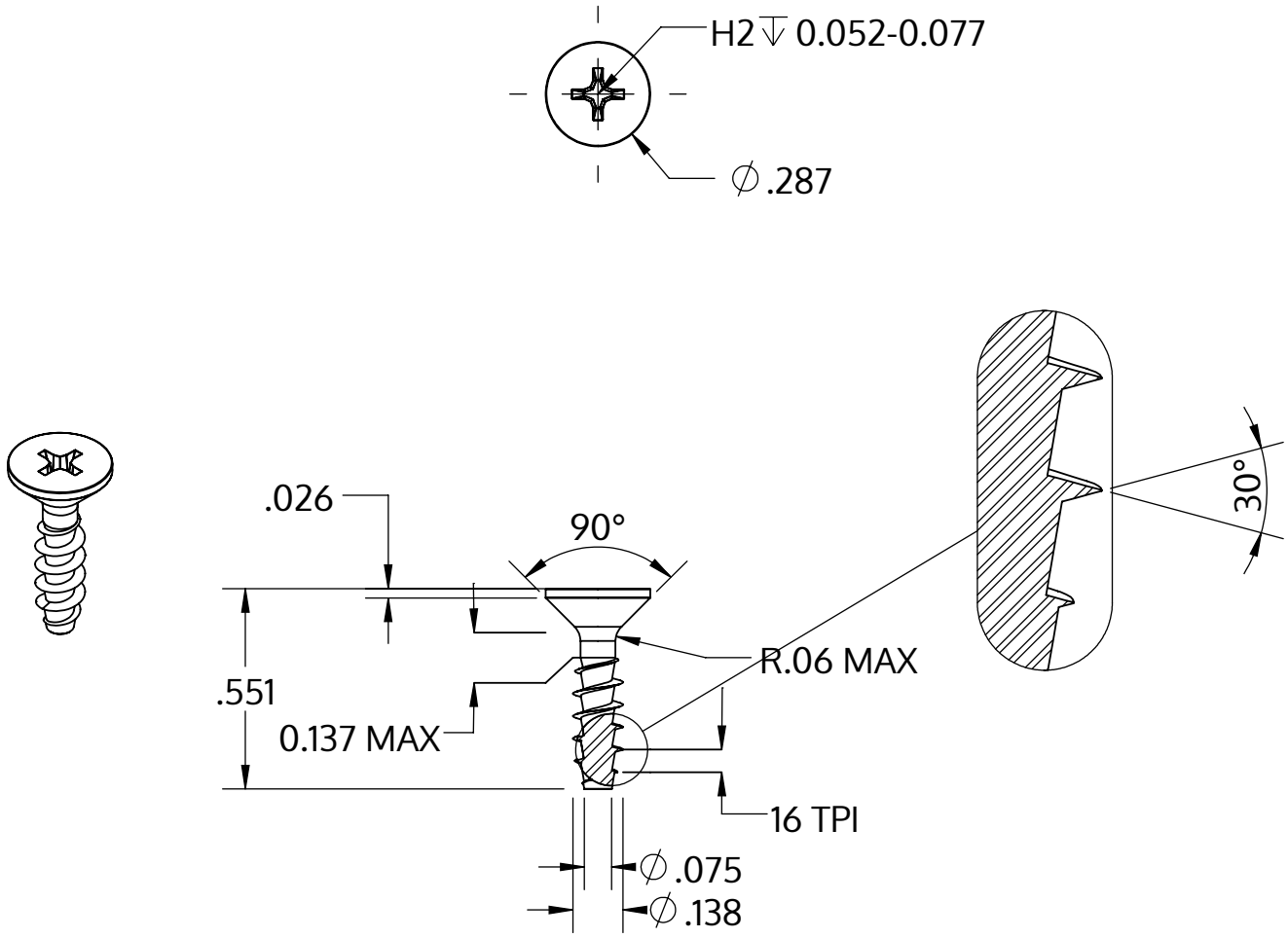


| | |
|---|---|
| Metric size | M3.5 x 1.57 mm |
| US size (converted) | #6-16 |
| | Tolerances [inch] |
| Length | +/- 0.021 |
| Head diameter | +0 / -0.014 |
| Head height | |
| Thread diameter | +0.007 / -0 |

| | |
|---|---|
| Description | STP33A 3.5x14.0 - H2 |
| Matière | acier inoxydable A2 |
| Surface | brillant décapé et passivé |
| Poids | 0.791 kg / 1000 Unité |

| | | |
|---|---|---|
| SCREWERK | **STP33A0350140E** | |
| _Zoll Zeichnung Größe A | Redimensionner 2:1 | 2024-10 |