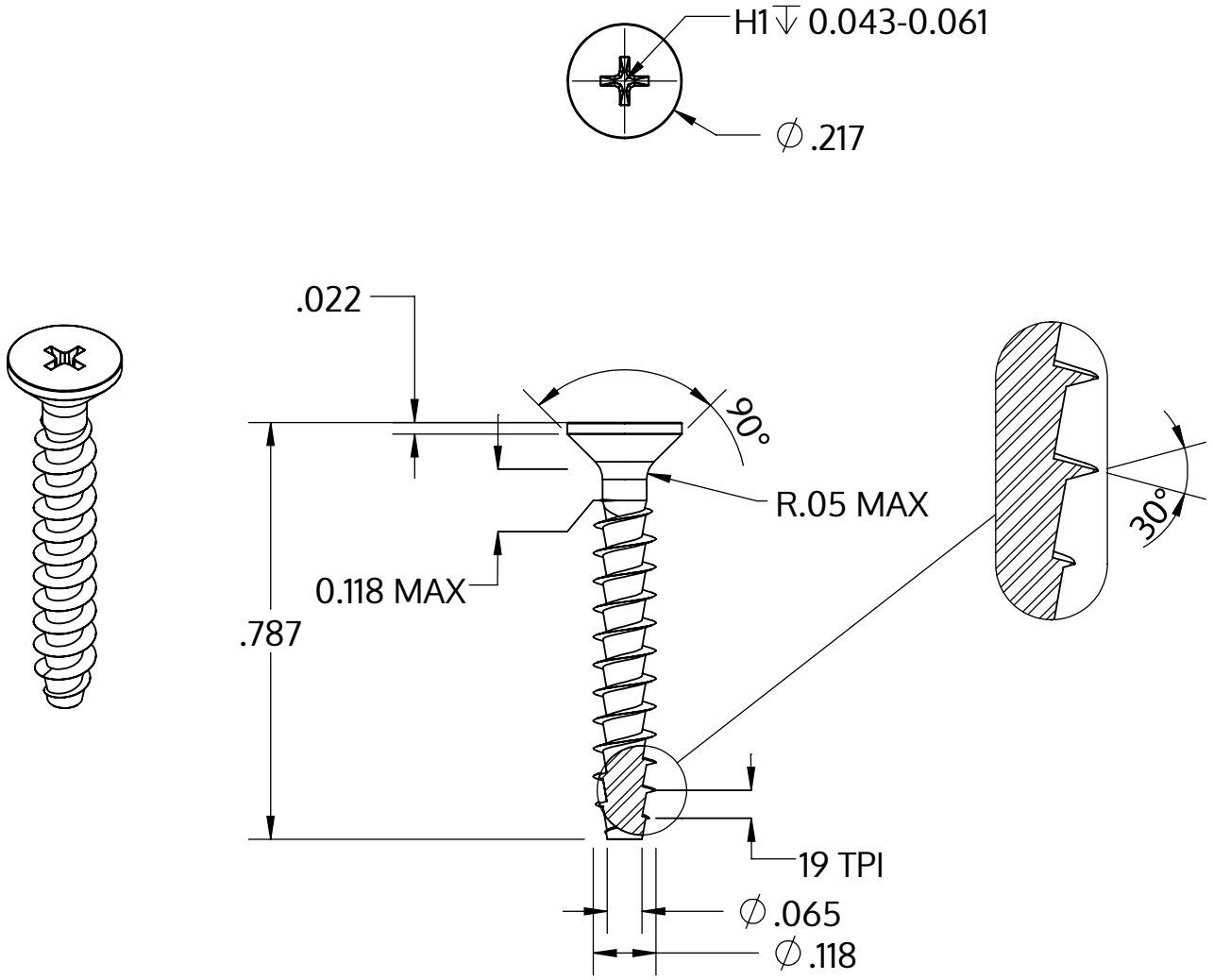

Metric size	M3 x 1.34 mm
US size (converted)	#4-19
	Tolerances [inch]
Length	+/- 0.025
Head diameter	+0 / -0.011
Head height	
Thread diameter	+0.005 / -0

Description	STP33A 3.0x20.0 - H1
Matière	acier inoxydable A2
Surface	brillant décapé et passivé
Poids	0.672 kg / 1000 Unité

SCREWERK	**STP33A0300200E**	
_Zoll Zeichnung Größe A	Redimensionner 3:1	2024-10