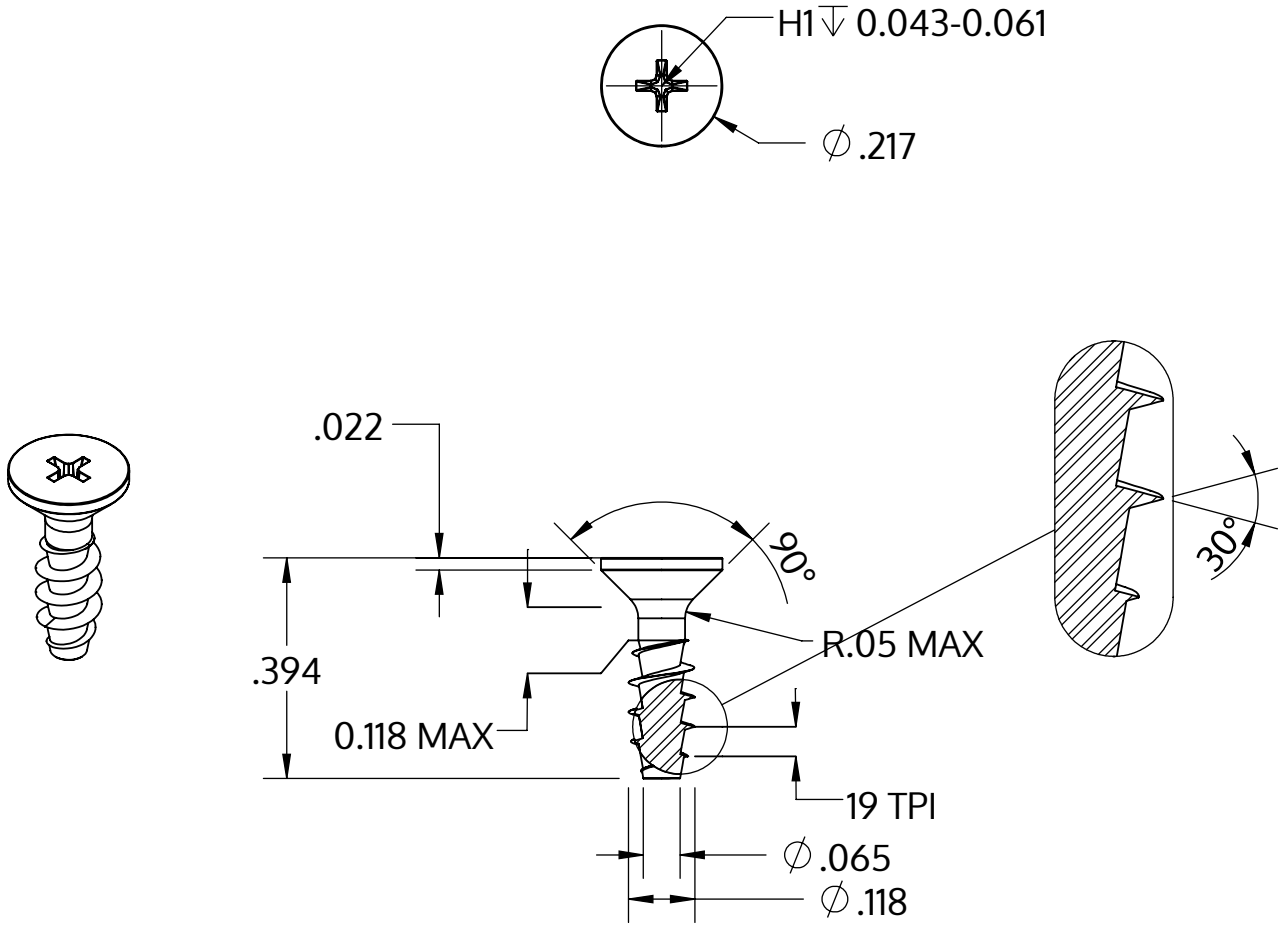

Metric size	M3 x 1.34 mm
US size (converted)	#4-19
	Tolerances [inch]
Length	+/- 0.017
Head diameter	+0 / -0.011
Head height	
Thread diameter	+0.005 / -0

Descriere	STP33A 3.0x10.0 - H1
Material	oțel, călit
Exterior	zincat 5-7 µm, recopt, pasivat transparent/albastru
Greutate	0.385 kg / 1000 unități

SCREWERK	**STP33A0300100S**	
_Zoll Zeichnung Größe A	Scalarea 3:1	2024-10