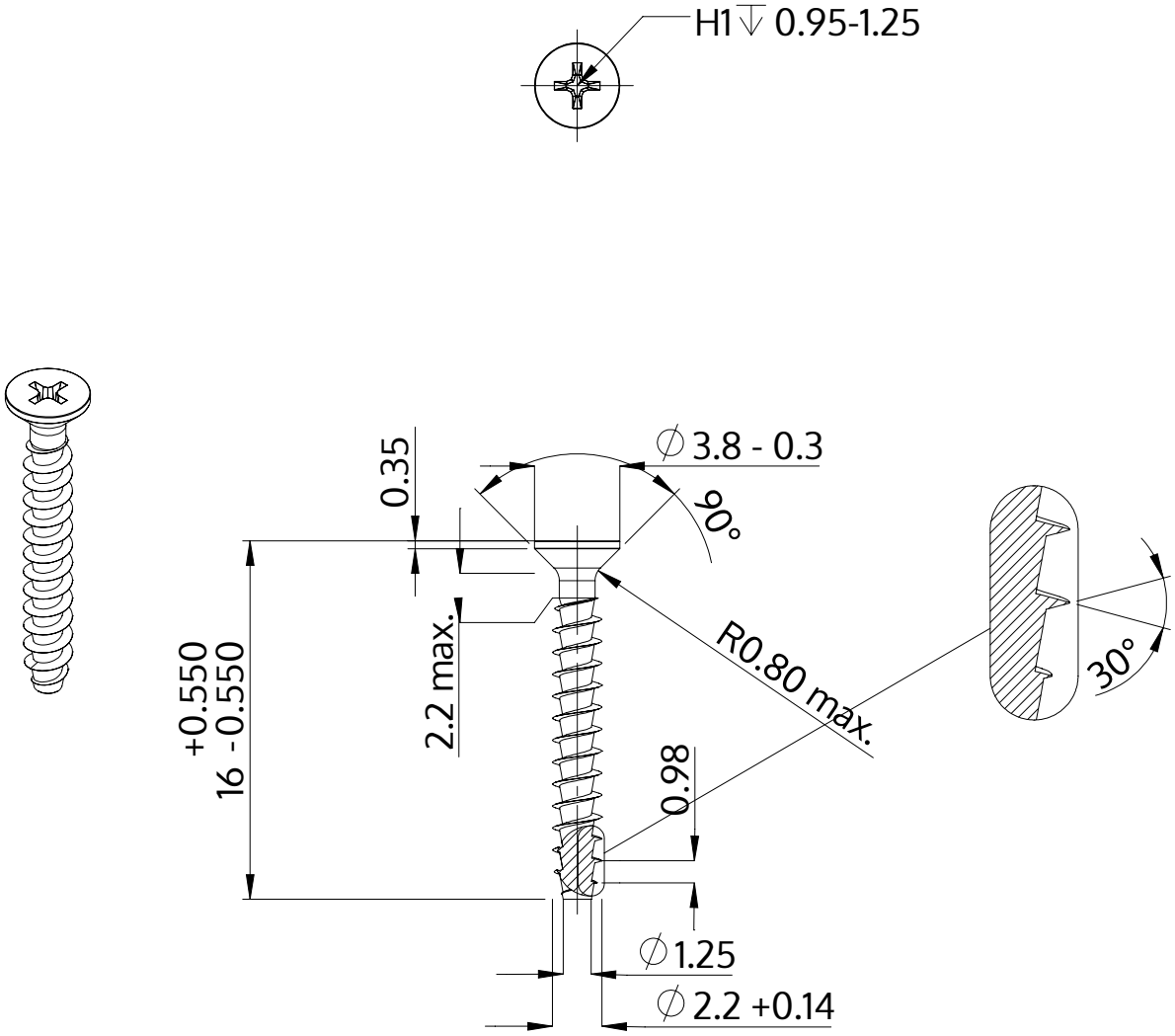

Description	STP33A 2.2x16.0 - H1
Material	steel, hardened
Surface	zinc-plated 5-7 µm, baked, blue / transparent passivated
Weight	0.285 kg / 1000 pieces

SCREWERK	**STP33A0220160S**	
Metric Drawing A4	Scale 3:1	2024-10