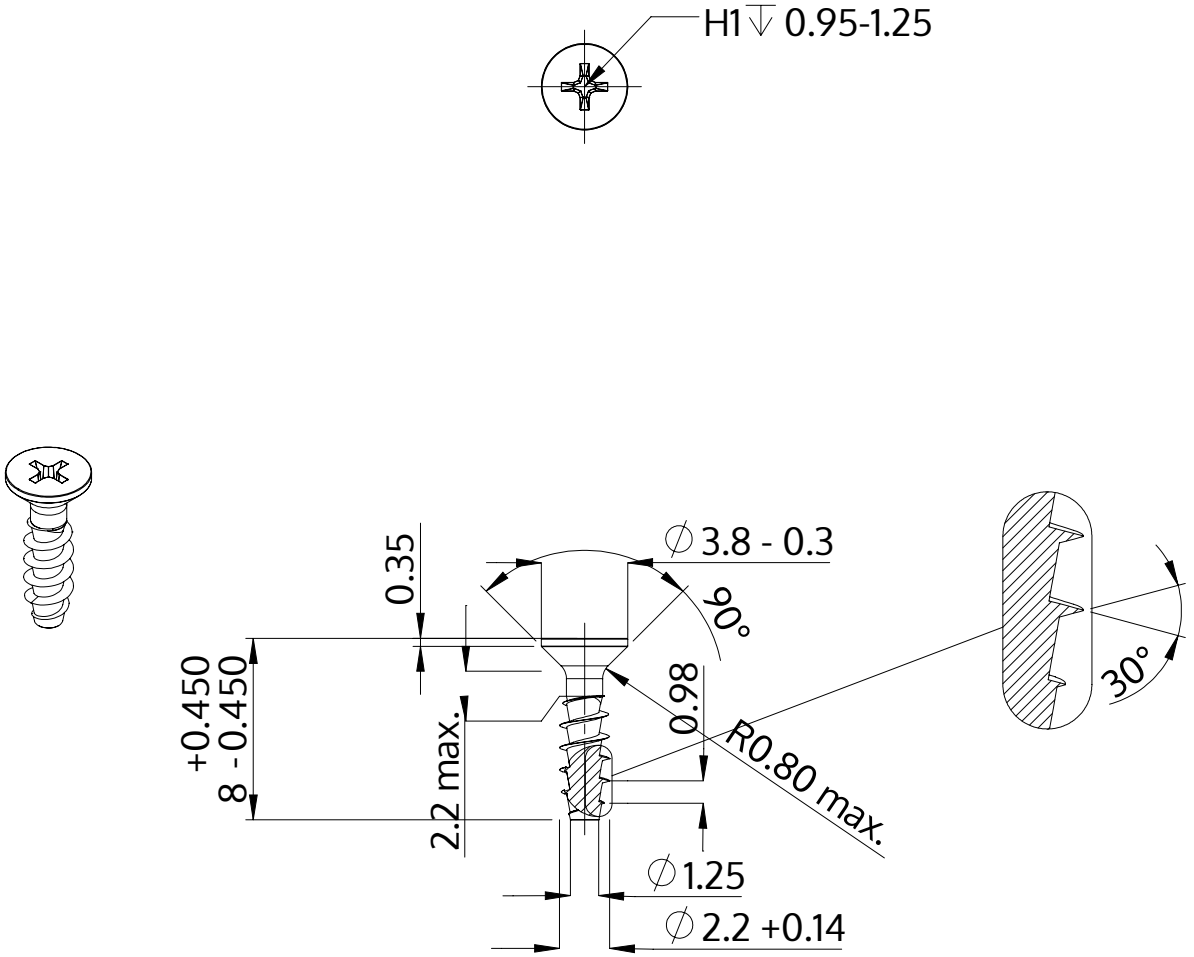

Description	STP33A 2.2x8.0 - H1
Material	stainless-steel A2
Surface	bright, pickled and passivated
Weight	0.158 kg / 1000 pieces

SCREWERK	**STP33A0220080E**	
Metric Drawing A4	Scale None:1	2024-04