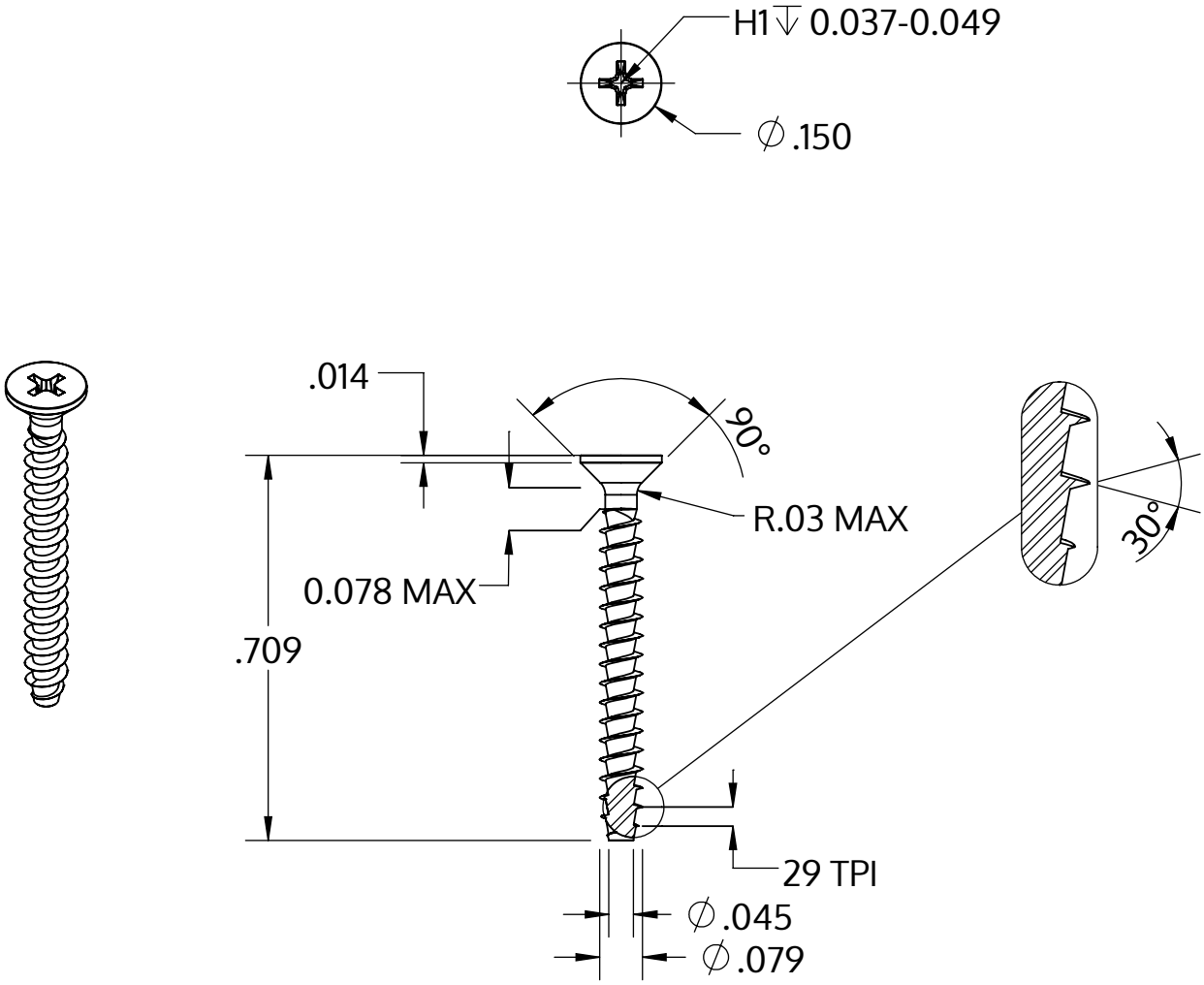

Metric size	M2 x 0.89 mm
US size (converted)	#1.5-29
	Tolerances [inch]
Length	+/- 0.021
Head diameter	+0 / -0.011
Head height	
Thread diameter	+0.005 / -0

Descrizione	STP33A 2.0x18.0 - H1
Materiale	acciaio inossidabile A2
Superficie	bianco-decapato e passivato
Peso	0.308 kg / 1000 pezzi

SCREWERK	**STP33A0200180E**	
_Zoll Zeichnung Größe A	Scala 3:1	2024-10